# SPECIAL CAUTIONS

## AIR BAGS

Refer to Procedure Explanation 29 for Supplemental Restraint/Air Bag Special Cautions.

## SEAT BELTS

Ford recommends that all seat belt assemblies in use during a collision be replaced unless the collision was minor and a qualified technician finds that the belts show no damage and continue to operate properly. Seat belt assemblies not in use should also be inspected and replaced if damage or improper operation is noted.

The replacement assembly must be installed as a matched set. Under no circumstances are seat belt or shoulder belt components to be replaced as individual components.

PDF processed with CutePDF evaluation edition www.CutePDF.com

1997 Ford Ranger XLT Extended Cab Pickup

# PAINT CODE LOCATION

Paint code located on rear face of left front door or on left pillar.

# CLEAR COAT IDENTIFICATION

## 1993-94

All colors except Black (Code YC), White (Code YO), Dark Ruby (Code E7), Mocha (Code DH) and Performance Red (Code EY) are clear coat.

## 1995-97

All colors are clear coat.

1997 Ford Ranger XLT Extended Cab Pickup

# INFORMATION LABELS

Labels must be special ordered from dealer by vehicle name, serial number and application.

# FRONT BUMPER

Procedures 1 and 28

1993-94

W/FOG LAMPS

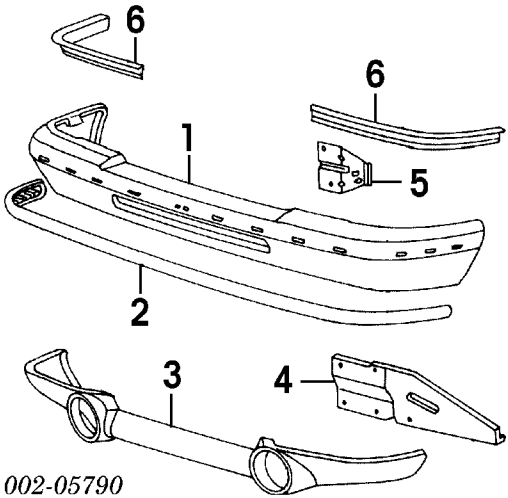


| | | |
|---|---|---|
| Refinish Front Bumper | | 1.6 |
| Refinish Valance Panel | | 1.2 |
| R&I Bumper Assy | | .5 |
| O/H Bumper Assy (Includes R&I) | #1.4 | |

#Includes R&R Fog Lamp Assemblies

| | | |
|---|---|---|
| Add to O/H Bumper Assy | | |
| w/Pad | | .3 |

NOTE: All Parts in this section are included in overhaul unless noted otherwise.

| | | | | |
|---|---|---|---|---|
| 1 | Bumper, Front | | | |
| | Chrome | #1.7 | F57Z 17757 AA | $879.90 |

#Includes R&R Fog Lamp Assemblies & Pad Assy

| | | | | |
|---|---|---|---|---|
| | Paint to Match | #1.4 | YL2Z 17757 CAB | $485.10 |

#Includes R&R Fog Lamp Assemblies

| | | | | |
|---|---|---|---|---|
| 2 | Pad, Bumper | | | |
| | Opal | .2 | F37Z 17K833 B | $57.33 |
| | Titanium | .2 | F37Z 17K833 A | $60.70 |
| 3 | Panel, Valance | | | |
| | Graphite | .5 | F57Z 17626 CAA | $82.68 |
| | Opal | .5 | F57Z 17626 CAB | $72.23 |
| | Titanium | .5 | F37Z 17626 A | $149.17 |

| | | | | | |
|---|---|---|---|---|---|
| Paint to Match | | | .5 | F37Z 17626 A | $149.17 |
| 4 Arm, Bumper | R | IOH | | F37Z 17752 A | $54.13 |
| | L | IOH | | F37Z 17752 B | $150.48 |
| 5 Plate, Bumper | R | IOH | | F37Z 17B894 A | $26.08 |
| | L | IOH | | F37Z 17B895 A | $26.17 |
| 6 Filler, Bumper | R | #.1 | | F37Z 17A861 A | $10.97 |
| | L | #.1 | | F37Z 17A861 B | $15.38 |

#w/Bumper Assy Removed, Not Included in O/H

| | | | |
|---|---|---|---|
| Bracket, License | .2 | F37Z 17A385 B | $23.47 |

1993-94

W/O FOG LAMPS

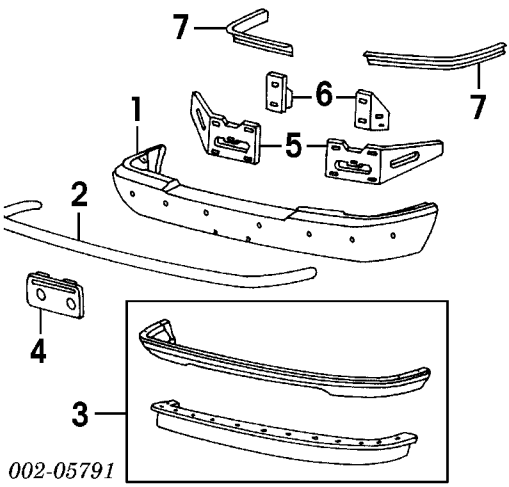


| | |
|---|---|
| Refinish Front Bumper | 1.6 |
| Refinish Valance Panel | 1.0 |
| R&I Bumper Assy | .5 |
| O/H Bumper Assy (Includes R&I) | 1.2 |
| Add to R&R Bumper Assy w/Pad | .3 |

NOTE: All Parts in this section are included in overhaul unless noted otherwise.

| | | | | |
|---|---|---|---|---|
| 1 Bumper, Front | | | | |
| Chrome | #1.5 | | F57Z 17757 AA | $879.90 |
| #Includes R&R Pad Assy | | | | |
| Paint to Match | | 1.2 | YL2Z 17757 CAB | $485.10 |
| 2 Pad, Bumper | | | | |
| Opal | | .3 | F37Z 17K833 B | $57.33 |
| Titanium | | .3 | F37Z 17K833 A | $60.70 |
| 3 Panel, Valance | | | | |
| w/Splash Model | | | | |

| | | | | | | |
|---|---|---|---|---|---|---|
| | Black | | | .5 | F37Z 17626 E | $251.35 |
| | Paint to Match | | | .5 | F37Z 17626 E | $251.35 |
| | w/o Splash Model | | | | | |
| | Graphite | | | .5 | F37Z 17626 F | $143.02 |
| | Opal | | | .5 | F37Z 17626 D | $168.92 |
| | Titanium | | | .5 | F37Z 17626 C | $82.25 |
| 4 | Bracket, License | | | .2 | F37Z 17A385 B | $23.47 |
| 5 | Arm, Bumper | R | IOH | | F37Z 17752 A | $54.13 |
| | | L | IOH | | F37Z 17752 B | $150.48 |
| 6 | Plate, Bumper | R | IOH | | F37Z 17B894 A | $26.08 |
| | | L | IOH | | F37Z 17B895 A | $26.17 |
| 7 | Filler, Bumper | R | #.1 | | F37Z 17A861 A | $10.97 |
| | | L | #.1 | | F37Z 17A861 B | $15.38 |

#w/Bumper Assy Removed, Not Included in O/H

1995-97

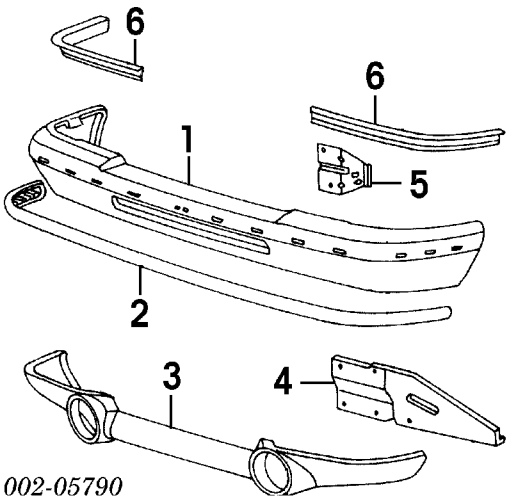


| | |
|---|---|
| Refinish Front Bumper | 1.6 |
| Refinish Valance Panel | 1.2 |
| R&I Bumper Assy | .5 |
| O/H Bumper Assy (Includes R&I) | 1.2 |
| Add to R&R or O/H Bumper Assy | |
| w/Impact Strip | .3 |
| w/Fog Lamps | .2 |

NOTE: All Parts in this section are included in overhaul unless noted otherwise.

1 Bumper, Front
w/Splash Model

| | | | | | |
|---|---|---|---|---|---|
| Bright Sapphire | | | 1.2 | YL2Z 17757 CAB | $485.10 |
| Paint to Match | | | 1.2 | YL2Z 17757 CAB | $485.10 |
| w/o Splash Model | | | | | |
| Chrome | | | 1.5 | F57Z 17757 AA | $879.90 |
| Paint to Match | | | 1.5 | YL2Z 17757 CAB | $485.10 |
| 2 Strip, Impact | | | | | |
| Graphite | | | .2 | F37Z 17K833 C | $60.03 |
| Titanium | | | .2 | F37Z 17K833 A | $60.70 |
| 3 Panel, Valance | | | | | |
| w/Splash Model | | | | | |
| Black | | | .5 | F37Z 17626 E | $251.35 |
| Paint to Match | | | .5 | F37Z 17626 E | $251.35 |
| w/o Splash Model | | | | | |
| w/Fog Lamps | | | | | |
| Graphite | | | .5 | F57Z 17626 CAA | $82.68 |
| Opal | | | .5 | F57Z 17626 CAB | $72.23 |
| Titanium | | | .5 | F37Z 17626 A | $149.17 |
| Paint to Match | | | .5 | F37Z 17626 A | $149.17 |
| w/o Fog Lamps | | | | | |
| Graphite | | | .5 | F37Z 17626 F | $143.02 |
| Titanium | | | .5 | F37Z 17626 C | $82.25 |
| 4 Arm, Bumper | R | IOH | | F37Z 17752 A | $54.13 |
| | L | IOH | | F37Z 17752 B | $150.48 |
| 5 Plate, Bumper | R | IOH | | F37Z 17B894 A | $26.08 |
| | L | IOH | | F37Z 17B895 A | $26.17 |
| 6 Filler, Bumper | R | #.1 | | F37Z 17A861 A | $10.97 |
| | L | #.1 | | F37Z 17A861 B | $15.38 |

#w/Bumper Assy Removed, Not Included in O/H

| | | | | | |
|---|---|---|---|---|---|
| Bracket, License | | | .2 | F37Z 17A385 B | $23.47 |

# GRILLE

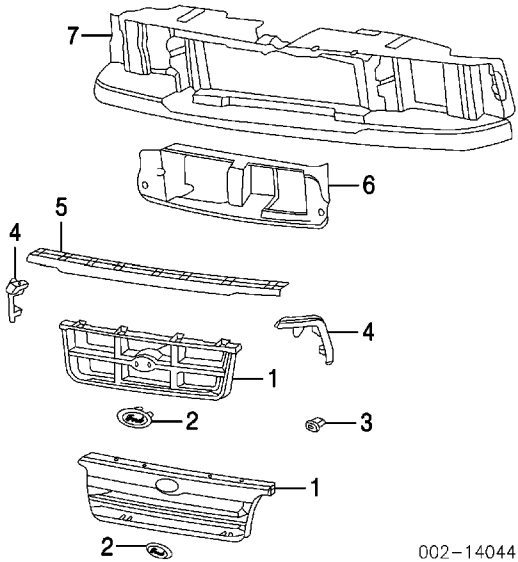


| | | | | | |
|---|---|---|---|---|---|
| Refinish Grille | | | 1.0 | | |
| Refinish Grille Opening Panel | | | 1.2 | | |
| Refinish Grille Side Moulding | | R | .3 | | |
| | | L | .3 | | |
| R&I Grille Assy | | | | | |
| 2WD | | #.5 | | | |
| #Includes R&R Grille Mldg | | | | | |
| R&I Grille Assy 4WD | | | .5 | | |
| 1 Grille Assy | | | | | |
| Flareside | | | | | |
| Black | 93 | | .6 | F37Z 8200 J | $76.33 |
| Perf Red | 93-9 | | .6 | N.A. | |
| Paint to Match | 93-9 | | .6 | F37Z 8200 DA | $121.32 |
| | 95-9 | | .6 | F57Z 8200 BA | $152.57 |
| Styleside | | | | | |
| 1993-94 | | | | | |
| 2WD (P) | | | | | |
| XL, STX Model | | #.6 | | F37Z 8200 BA | $107.20 |
| XLT Model | | #.6 | | F37Z 8200 CA | $77.23 |
| 4WD | | | | | |
| Chrome | | #.6 | | F47Z 8200 F | $187.58 |
| Titanium | | #.6 | | F47Z 8200 D | $148.02 |
| Paint to Match | | #.6 | | F37Z 8200 AA | $109.10 |
| 1995-97 | | | | | |
| XL, STX Model (P) | | #.6 | | F57Z 8200 BA | $152.57 |
| XLT Model | | | | | |

1997 Ford Ranger XLT Extended Cab Pickup

| | | | | | |
|---|---|---|---|---|---|
| Graphite | | | #.6 | F57Z 8200 KK | $136.52 |
| Titanium | | | #.6 | F57Z 8200 H | $149.68 |
| Paint to Match | | | #.6 | F57Z 8200 KK | $136.52 |

(P) Paint to Match

#Includes R&R Grille Side Mouldings

| | | | | | |
|---|---|---|---|---|---|
| 2 Emblem | | | | | |
| 1993-94 | | | | E8DZ 8A223 A | $21.10 |
| 1995-97 | | | | | |
| XL, STX Model | | | | E8DZ 8A223 A | $21.10 |
| XLT Model (a) | | | | E8DZ 8A223 A | $21.10 |

(a) Included w/Grille Assy

| | | | | | |
|---|---|---|---|---|---|
| 3 Bumper, Grille | | R | | F3TZ 8C167 A | $5.75 |
| | | L | | F3TZ 8C167 A | $5.75 |
| 4 Mldg, Side Grille | | | | | |
| Flareside | | | | | |
| Black | 93-9 | R | #.4 | F37Z 16160 D | $94.82 |
| | | L | #.4 | F37Z 16161 D | $67.90 |
| | 95-9 | R | #.4 | F57Z 16160 A | $39.24 |
| | | L | #.4 | F57Z 16161 A | $36.03 |
| Paint to Match | 93-9 | R | #.4 | F37Z 16160 D | $94.82 |
| | | L | #.4 | F37Z 16161 D | $67.90 |
| | 95-9 | R | #.4 | F57Z 16160 A | $39.24 |
| | | L | #.4 | F57Z 16161 A | $36.03 |
| Styleside | | | | | |
| 1993-94 | | | | | |
| XL, STX Model | | | | | |
| Opal | | R | #.4 | F37Z 16160 B | $39.62 |
| | | L | #.4 | F37Z 16161 B | $55.43 |
| Titanium | | R | #.4 | F37Z 16160 C | $41.30 |
| | | L | #.4 | F37Z 16161 C | $47.50 |
| XLT Model | | | | | |
| Chrome | | R | #.4 | F37Z 16160 A | $43.57 |
| | | L | #.4 | F37Z 16161 A | $43.78 |
| 1995-97 | | | | | |
| XL, STX Model | | | | | |
| Graphite | | R | #.4 | F57Z 16160 C | $27.95 |
| | | L | #.4 | F57Z 16161 C | $27.13 |
| Titanium | | R | #.4 | F57Z 16160 B | $26.92 |
| | | L | #.4 | F57Z 16161 B | $26.92 |
| XLT Model | | | | | |
| Chrome | | R | #.4 | F57Z 16160 CB | $29.85 |
| | | L | #.4 | F57Z 16161 CB | $30.43 |

#Includes R&R Park/Side Marker Lamp Assy, Included in R&R Fender

5 Mldg, Grille

1997 Ford Ranger XLT Extended Cab Pickup

| | | | | |
|---|---|---|---|---|
| | 1993-94 | | | |
| | Chrome | .2 | F37Z 8419 A | $93.67 |
| | Paint to Match-Serviced w/Grille | | | |
| | 1995-97-Serviced w/Grille | | | |
| 6 | Cover, Front Panel | | | |
| | 1993-94 | #.2 | F67Z 8C299 DA | $55.28 |
| | 1995-97 | | | |
| | 2.3L, 3.0L Eng | #.2 | F67Z 8C299 DA | $55.28 |
| | 4.0L Eng¶ | #.2 | F57Z 8C299 AD | $45.07 |
| | ¶Order by Application | | | |
| | #w/Grille Assy Removed, Included in R&R Front Panel | | | |
| 7 | Panel, Front | #1.6 | F67Z 8190 AA | $226.90 |
| | #Includes R&I Grille Assy, Headlamps, Park/Side Marker Lamps & Bumper Fillers | | | |

# FRONT LAMPS

## HEADLAMP

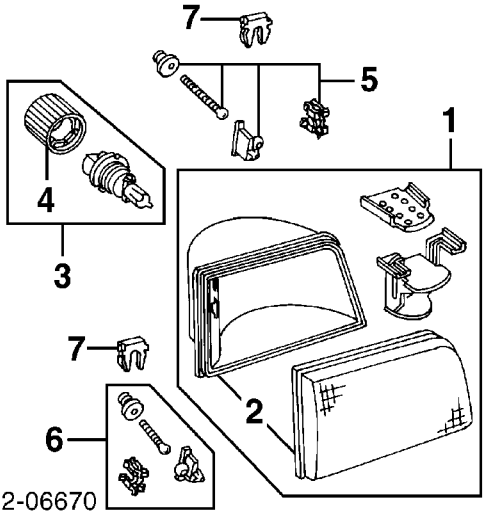


| | | | | | |
|---|---|---|---|---|---|
| Aim Lamps | | | .4 | | |
| R&I Headlamp Assy | | R | #.7 | | |
| | | L | #.7 | | |

#Includes R&I Grille, R&I Both Headlamps .9

NOTE: R&R Does Not include aim lamps.

| | | | | | | |
|---|---|---|---|---|---|---|
| 1 | Headlamp Assy | | R | #.8 | F37Z 13008 A | $125.70 |
| | | | L | #.8 | F37Z 13008 B | $125.70 |
| 2 | Lens & Body¶ | | R | #.9 | F37Z 13008 A | $125.70 |
| | | | L | #.9 | F37Z 13008 B | $125.70 |

¶Included w/Headlamp Assy

#Includes R&I Grille

| | | | | | | |
|---|---|---|---|---|---|---|
| 3 | Bulb & Retainer Assy | 93-9 | R | #.3 | F4TZ 13N021 B | $15.88 |
| | | | L | #.3 | F4TZ 13N021 B | $15.88 |
| | | 95-9 | R | #.3 | F4TZ 13N021 B | $15.88 |
| | | | L | #.3 | F4TZ 13N021 B | $15.88 |

#Included in R&R Lamp Assy & Lens & Body

| | | | | | |
|---|---|---|---|---|---|
| 4 | Retainer, Bulb (a) | | R | | E9FZ 13N019 A | $6.66 |
| | | | L | | E9FZ 13N019 A | $6.66 |

(a) Included w/Bulb & Retainer Assy

| | | | | | |
|---|---|---|---|---|---|
| 5 | Screw, Adjusting | | R | | F37Z 13032 C | $4.60 |
| | | | L | | F37Z 13032 C | $4.60 |

| | | | | | | |
|---|---|---|---|---|---|---|
| 6 | Screw, Pivot Adj | | R | | F37Z 13032 B | $5.98 |
| | | | L | | F37Z 13032 B | $5.98 |
| 7 | Clip, Mtg (4/Side) | | R | | E9DZ 13N129 A | $4.33 |
| | | | L | | E9DZ 13N129 A | $4.33 |
| | Module, DRL | | | #.3 | F43Z 15A272 A | $142.62 |
| | Bracket, DRL Module | 93-9 | | #.3 | FOTZ 13B214 B | $33.50 |
| | | 96-9 | | #.3 | F6DZ 13B214 A | $33.93 |

#R&R Complete

## PARK/SIDE MARKER LAMP

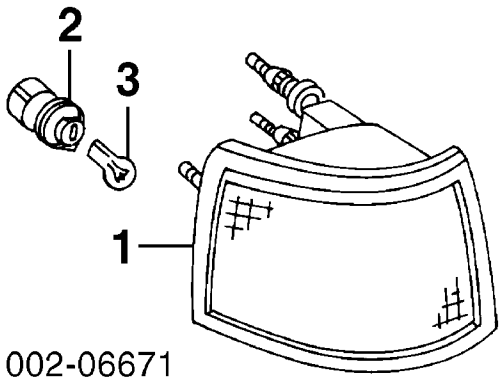


| | | | | | | |
|---|---|---|---|---|---|---|
| | R&I Lamp Assy | | R | .2 | | |
| | | | L | .2 | | |
| 1 | Lamp, Park/Side Marker | | R | .2 | F37Z 13200 B | $62.92 |
| | | | L | .2 | F37Z 13201 A | $66.48 |
| 2 | Socket | | R | | F1TZ 13411 F | $14.38 |
| | | | L | | F1TZ 13411 F | $14.38 |
| 3 | Bulb | | R | #.2 | E35Y 13466 A | $2.10 |
| | | | L | #.2 | E35Y 13466 A | $2.10 |

#Included in R&R Lamp Assy

## FOG LAMP

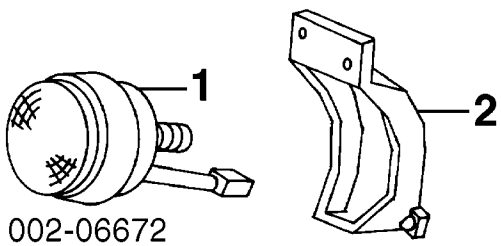


| | | | | | | |
|---|---|---|---|---|---|---|
| | R&I Fog Lamp | | R | #.3 | | |
| | | | L | #.3 | | |

#Included in R&R Front Bumper

| | | | | | | |
|---|---|---|---|---|---|---|
| 1 | Lamp, Fog | | R | #.3 | F67Z 15200 AA | $89.55 |
| | | | L | #.3 | F67Z 15200 AA | $89.55 |

1997 Ford Ranger XLT Extended Cab Pickup

| | | | | | |
|---|---|---|---|---|---|
| 2 | Bracket, Fog Lamp | R | #.3 | F3TZ 15266 A | $183.55 |
| | | L | #.3 | F3TZ 15266 B | $172.02 |
| | #R&R Complete, Included in R&R Front Bumper | | | | |
| | Bulb, Fog Lamp | R | #.2 | F67Z 13465 AA | $13.77 |
| | | L | #.2 | F67Z 13465 AA | $13.77 |
| | #Included in R&R Fog Lamp | | | | |

# HOOD

Procedures 4 and 28

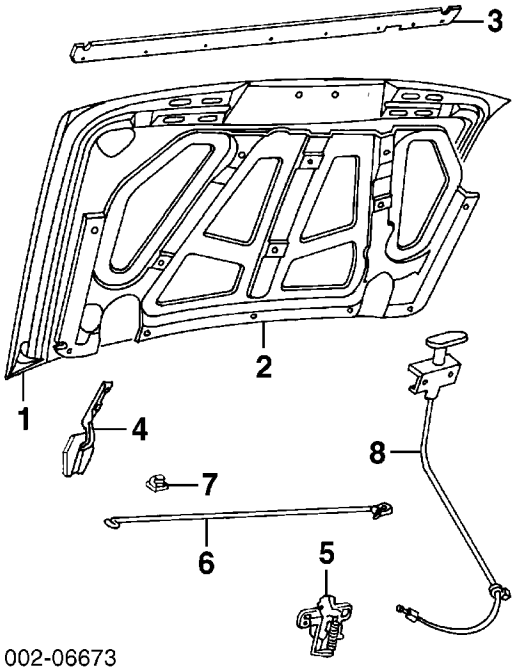


002-06673

| | | | | | | |
|---|---|---|---|---|---|---|
| | Refinish Hood Outside | | | 2.7 | | |
| | Add for Underside | | | 1.2 | | |
| | Refinish Hinge | | R | .2 | | |
| | | | L | .2 | | |
| | R&I Hood Assy | | | .5 | | |
| 1 | Panel, Hood | | | .7 | F57Z 16612 A | $653.02 |
| 2 | Insulator | 93-9 | | .3 | F37Z 16738 A | $82.83 |
| | | 95-9 | | .3 | F57Z 16738 A | $113.97 |
| 3 | Seal, Front | 93 | | .1 | F37Z 16A238 A | $189.93 |
| | | 94-9 | | .1 | F47Z 16A238 A | $29.47 |
| | | 97 | | .1 | F67Z 16A238 AA | $21.85 |
| 4 | Hinge | | R #.8 | | F87Z 16796 BA | $25.10 |
| | | | L #.8 | | F87Z 16796 BA | $25.10 |
| | #w/Hood Removed | | | | | |
| 5 | Latch | 93-9 | | .3 | F47Z 16700 A | $45.12 |
| | | 95-9 | | .3 | F47Z 16700 A | $45.12 |
| 6 | Rod, Support | | | .2 | F37Z 16826 A | $10.95 |
| 7 | Clip, Rod | | | | E83Z 16828 A | $2.67 |
| 8 | Cable, Release | | | | | |
| | 1993-94¶ | | | .8 | F37Z 16916 A | $33.98 |
| | 1995-97 | | | .8 | F5TZ 16916 B | $50.68 |
| | ¶Includes Handle | | | | | |
| | Handle, Hood Release | 95-9 | #.3 | | F5TZ 16916 C | $31.32 |

# 1997 Ford Ranger XLT Extended Cab Pickup

#Included in R&R Cable

# COOLING

Procedures 5 and 28

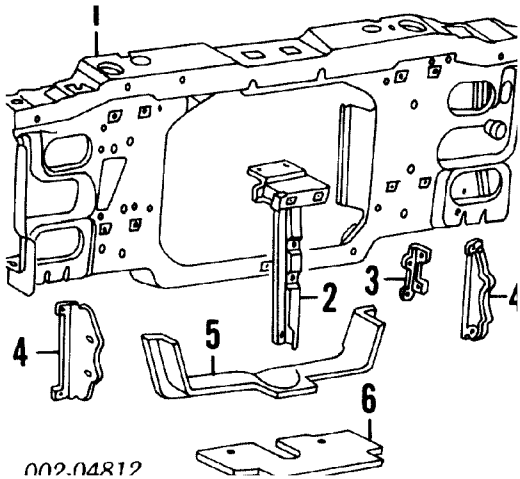


Refinish Radiator Support Complete 1.5

Add to R&R Radiator Support

To R&R Base Model Mechanical Components

1993-94 #.1

#Includes R&R Vapor Canister

To R&R Base Model Mechanical Components 1995-97 #.2

#Includes R&R Vapor Canister & Air Bag Sensor

Add to R&R Radiator Support w/ A/C #.3

#To R&R Condenser

Evacuate & Recharge System 1.4

Recover Refrigerant .3

| | | | | | |
|---|---|---|---|---|---|
| 1 | Support, Radiator | 93-9 | #5.9 | F37Z 16138 A | $217.98 |
| | | 95-9 | #5.9 | F77Z 16138 BA | $356.25 |

#Includes R&R Latch, Support Brace, Support Rod, Radiator & Shroud, Side & Center Panel Brackets, Air Deflectors, Coolant Tank, Battery & Tray, Horns, Air Intake Tube/Duct/Baffle, D&C Wiring Harness & Latch Cable

| | | | | | |
|---|---|---|---|---|---|
| 2 | Brace, Support | 93-9 | #.3 | F37Z 16864 A | $85.83 |

| | | | | | | |
|---|---|---|---|---|---|---|
| | | 95-9 | | #.3 | F57Z 16864 A | $47.27 |
| #w/Grille Opening Panel Removed, Includes R&R Latch & Center Panel Bracket | | | | | | |
| 3 Bracket, Panel Ctr | | | | #.1 | F37Z 8B455 A | $4.98 |
| 4 Bracket, Panel Side | | | R | #.1 | F57Z 8B455 A | $57.88 |
| | | | L | #.1 | F57Z 8B455 A | $57.88 |
| #w/Grille Opening Panel Removed | | | | | | |
| 5 Deflector, Air Lwr | | | | .2 | F47Z 8349 B | $29.27 |
| 6 Deflector, Air | | | | | | |
| 1 Piece | | 93-9 | | .2 | F47Z 8327 A | $47.23 |
| | | 95-9 | | .2 | F57Z 8327 C | $63.00 |
| 2 Piece | | | | | | |
| 1993-Not Serviced | | | | | | |
| | 1994 | | R | .1 | F47Z 8327 B | $4.88 |
| | | | L | .1 | F47Z 8327 B | $4.88 |
| 1995-97 | | | R | .1 | F57Z 8327 A | $8.33 |
| | | | L | .1 | F57Z 8327 A | $8.33 |

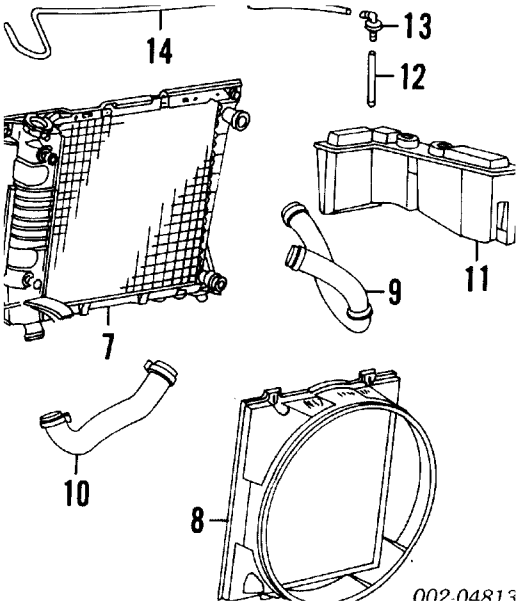


| | | | | | | |
|---|---|---|---|---|---|---|
| 7 Radiator¶ | | | | | | |
| 4 Cyl | | | | .8 | FOTZ 8005 AA | $505.35 |
| 6 Cyl | | | | .9 | FOTZ 8005 EA | $439.48 |
| Cap, Radiator¶ | | | | | | |
| 4 Cyl | | | | | E5TZ 8100 A | $8.60 |
| 6 Cyl | | | | | F4TZ 8100 B | $8.62 |
| ¶Order by Application | | | | | | |
| Drain, Radiator | | | | | FOAZ 8115 A | $6.45 |
| 8 Shroud, Fan | | | | | | |

1997 Ford Ranger XLT Extended Cab Pickup

| | | | | |
|---|---|---|---|---|
| 4 Cyl | 93-9 | .5 | F47Z 8146 A | $94.13 |
| | 95-9 | .5 | F57Z 8146 D | $66.47 |
| 6 Cyl | | | | |
| 3.0L Eng | 93-9 | .5 | F37Z 8146 C | $69.50 |
| | 95-9 | .5 | F77Z 8146 XA | $70.63 |
| 4.0L Eng | | | | |
| Man Trans | 93-9 | .5 | F37Z 8146 A | $90.08 |
| | 95-9 | .5 | F57Z 8146 A | $99.38 |
| Auto Trans | 93-9 | .5 | F37Z 8146 B | $93.33 |
| | 95-9 | .5 | F57Z 8146 C | $99.75 |
| Clutch, Fan | | | | |
| 4 Cyl | | #.7 | F57Z 8A616 C | $88.33 |
| 6 Cyl | | | | |
| 3.0L Eng | | | | |
| w/Super Cooling | 93-9 | #.7 | F1TZ 8A616 H | $102.85 |
| | 95-9 | #.7 | F57Z 8A616 B | $241.90 |
| w/o Super Cooling | 93-9 | #.7 | N.A. | |
| | 95-9 | #.7 | F57Z 8A616 D | $141.70 |
| 4.0L Eng | | | | |
| w/Super Cooling | 93-9 | #.7 | F1TZ 8A616 G | $195.05 |
| | 95-9 | #.7 | F5TZ 8A616 RA | |
| | 97 | #.7 | F77Z 8A616 LB | $235.83 |
| w/o Super Cooling | 93-9 | #.7 | F1TZ 8A616 E | $110.48 |
| | 95 | #.7 | F57Z 8A616 A | $178.90 |
| | 96-9 | #.7 | N.A. | |
| Fan | | | | |
| 4 Cyl | | #.7 | E5TZ 8600 A | $95.12 |
| 6 Cyl | | | | |
| 3.0L Eng | 93-9 | #.7 | F09Z 8600 A | |
| | 95-9 | #.7 | F57Z 8600 B | $80.83 |
| 4.0L Eng | | | | |
| w/Super Cooling | | #.7 | F3TZ 8600 C | $87.17 |
| w/o Super Cooling | | #.7 | F3TZ 8600 B | $102.10 |

#R&R Complete, w/Radiator Removed Deduct .5

| | | | | |
|---|---|---|---|---|
| Pulley, Water Pump | | | | |
| 4 Cyl | 93-9 | .5 | F2TZ 8509 B | $11.80 |
| | 95-9 | .5 | F87Z 8509 AB | $24.25 |
| 6 Cyl | | | | |
| 3.0L Eng | | .7 | F2TZ 8509 A | $67.53 |
| 4.0L Eng | | .7 | 6L2Z 8509 AA | $17.15 |
| Belt, Drive | | | | |
| 4 Cyl | | | | |
| Man Strg | 93 | .5 | E2SZ 8620 A | $34.18 |
| | 94 | .5 | E2SZ 8620 A | $34.18 |

| | | | | | |
|---|---|---|---|---|---|
| | | 95-9 | | .5 | F57Z 8620 A | $40.27 |
| | Pwr Strg | | | | | |
| | w/ A/C | 93 | | .7 | D9PZ 8620 T | $47.93 |
| | | 94 | | .7 | D9PZ 8620 T | $47.93 |
| | | 95-9 | | .7 | F57Z 8620 C | $52.93 |
| | w/o A/C | 93 | | .6 | E8PZ 8620 C | $45.60 |
| | | 94 | | .6 | F47Z 8620 E | $40.27 |
| | | 95-9 | | .6 | F57Z 8620 B | $40.27 |
| | 6 Cyl | | | | | |
| | 3.0L Eng | | | | | |
| | w/ A/C | | | .7 | E7TZ 8620 J | $51.78 |
| | w/o A/C | | | .7 | F67Z 8620 CA | $58.87 |
| | 4.0L Eng | | | | | |
| | Man Strg | | | | | |
| | w/ A/C | 93-9 | | .7 | E7PZ 8620 B | $58.33 |
| | | 95-9 | | .7 | F67Z 8620 CA | $58.87 |
| | w/o A/C | 93-9 | | .6 | XL2Z 8620 CA | $49.84 |
| | | 95-9 | | .6 | XL2Z 8620 CA | $49.84 |
| | Pwr Strg | | | .7 | F67Z 8620 CA | $58.87 |
| | Pump, Water | | | | | |
| | 4 Cyl | 93-9 | #1.5 | | E6ZZ 8501 A | $109.98 |
| | | 95-9 | #1.5 | | XL5Z 8501 CA | $197.98 |
| | #w/ A/C Add .7 | | | | | |
| | 6 Cyl | | | | | |
| | 3.0L Eng | 93-9 | #1.9 | | F59Z 8501 B | $153.98 |
| | | 95-9 | #1.9 | | XL5Z 8501 AD | $187.98 |
| | 4.0L Eng | | #1.9 | | F7TZ 8501 AB | $256.50 |
| | #w/ A/C Add .4 | | | | | |
| 9 | Hose, Rad Upper | | | | | |
| | 4 Cyl | | | | | |
| | 1993-94 | | | | | |
| | To 12-1-93 | | #.6 | | F2TZ 8260 A | $26.24 |
| | From 12-1-93 | | | | | |
| | w/ A/C | | #.6 | | F2TZ 8260 A | $26.24 |
| | w/o A/C | | #.6 | | FOTZ 8260 H | $25.53 |
| | 1995-97 | | #.6 | | F67Z 8260 HA | $28.76 |
| | 6 Cyl | | | | | |
| | 3.0L Eng | 93-9 | #.6 | | F3TZ 8260 A | $31.47 |
| | | 95-9 | #.6 | | F57Z 8260 D | $27.16 |
| | 4.0L Eng | | | | | |
| | 1993-94 | | | | | |
| | Man Trans | | #.6 | | F1TZ 8260 A | $28.73 |
| | Auto Trans | | #.6 | | FOTZ 8260 B | $33.27 |
| | 1995-97 | | #.6 | | F57Z 8260 C | $38.40 |
| 10 | Hose, Rad Lower | | | | | |
| | 4 Cyl | 93-9 | #.8 | | F1TZ 8286 C | $32.02 |

1997 Ford Ranger XLT Extended Cab Pickup

| | | | | | |
|---|---|---|---|---|---|
| | | 95-9 | #.8 | F67Z 8260 HA | $28.76 |
| 6 Cyl | | | | | |
| 3.0L Eng | | | | | |
| 1993-94 | | | | | |
| Man Trans | | | #.8 | F3TZ 8286 B | $21.40 |
| Auto Trans | | | #.8 | F3TZ 8286 A | $23.00 |
| 1995-97 | | | #.8 | F57Z 8286 AF | $56.73 |
| 4.0L Eng | | | | | |
| 1993-94 | | | | | |
| Man Trans | | | #.8 | FOTZ 8286 B | $26.71 |
| Auto Trans | | | #.8 | F2TZ 8286 B | $25.29 |
| 1995-97 | | | #.8 | F57Z 8286 C | $27.98 |
| #R&R Both 1.0 | | | | | |
| 11 | Tank, Coolant/Reservoir | | .5 | F37Z 17618 B | $71.98 |
| 12 | Hose, Coolant Tank | | | F3TZ 8N029 A | $3.00 |
| 13 | Cap, Coolant Tank | | | F3TZ 8075 A | $9.30 |
| 14 | Hose, Overflow | | | | |
| 4 Cyl | | | .1 | F3TZ 8075 A | $9.30 |
| 6 Cyl | | | .1 | F3TZ 8075 B | $9.43 |

# A/C REFRIGERANT CAPACITIES

A/C R-12 Refrigerant Capacity

1993: 28 Ozs (1.75 Lbs)

A/C R-134 Refrigerant Capacity

1994-97: 22 Ozs (1.37 Lbs)

# A/C /HEATER

## Procedure 6

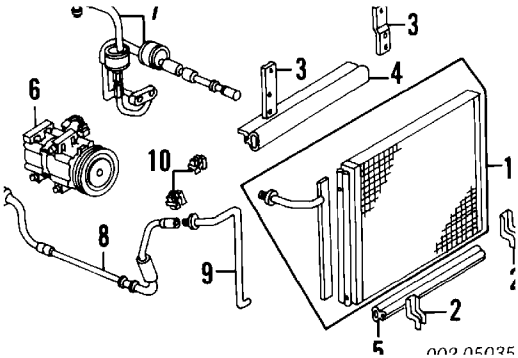


| | | |
|---|---|---|
| Evacuate & Recharge System | 1.4 | |
| Recover Refrigerant | .3 | |

NOTE: R&R Does Not include recover, evacuate and recharge system.

| | | | | | |
|---|---|---|---|---|---|
| 1 | Condenser | 93-9 | #.8 | F4TZ 19712 C | $219.96 |
| | | 95-9 | #.8 | F57Z 19712 A | $341.40 |

#w/Radiator Removed Deduct .5

| | | | | | |
|---|---|---|---|---|---|
| | Bracket, Condenser | | | | |
| 2 | Lower | R | | FOTZ 19735 A | $8.32 |
| | | L | | FOTZ 19702 A | $8.97 |
| 3 | Upper | R | | FOTZ 19702 A | $8.97 |
| | | L | | FOTZ 19732 A | $22.12 |
| | Seal, Condenser¶ | | | | |
| 4 | Upper | | | E9TZ 19E572 A | $5.60 |
| 5 | Lower | | | F3TZ 19E572 A | $11.03 |
| 6 | Compressor¶ | | | | |
| | 4 Cyl | | 2.2 | 4R3Z 19703 A | $345.66 |
| | 6 Cyl | | 1.3 | 4R3Z 19703 A | $345.66 |
| | Clutch¶ | | | | |
| | 4 Cyl | | #1.1 | 6F3Z 19D786 AA | $55.28 |
| | 6 Cyl | | | | |
| | 3.0L Eng | | #.8 | 6S4Z 19D786 AA | $55.28 |
| | 4.0L Eng | | #1.0 | 6S4Z 19D786 AA | $55.28 |
| | Pulley¶ | | | | |
| | 4 Cyl | | #1.1 | E9TZ 19D784 A | $117.50 |
| | 6 Cyl | | | | |
| | 3.0L Eng | | #.8 | F2OY 19D784 A | $96.76 |
| | 4.0L Eng | | #1.0 | F2OY 19D784 A | $96.76 |

#R&R Complete, Included in R&R Compressor

| | | | | | |
|---|---|---|---|---|---|
| 7 | Hose, Suction Line¶ | | | .6 F37Z 19D850 C | $291.70 |
| 8 | Hose, Liquid Line¶ | | | .6 F47Z 19837 A | $52.76 |
| 9 | Hose, Liquid Outlet¶ | | | .3 FOTZ 19835 A | $7.21 |
| | ¶Order by Application | | | | |
| | Bracket, Front | 93-9 | | FOTZ 19D721 A | $7.58 |
| | | 95-9 | | F57Z 19D721 A | $8.20 |
| 10 | Clip | | | | |
| | 1/2" Coupling | | | 6L2Z 19E746 AA | $6.25 |
| | 3/8" Coupling | | | F8DZ 19E746 BA | $7.45 |

Belt, Drive-See Cooling Section

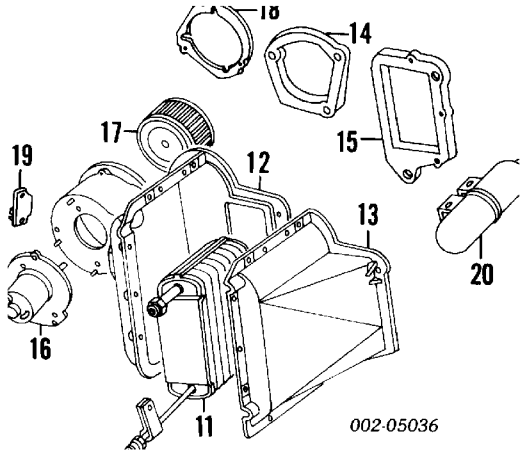


| | | | | | |
|---|---|---|---|---|---|
| 11 | Core, Evaporator | | #1.1 | E3TZ 19860 C | $273.38 |
| | #Includes R&R Left Case | | | | |
| | Case, Evaporator | | | | |
| 12 | Right | | #1.6 | FOTZ 19E589 A | $94.20 |
| | #Includes R&R Blower Motor, Fan & Core | | | | |
| 13 | Left | | | .6 F1TZ 19A553 A | $26.90 |
| | Seal, Case | | | | |
| 14 | Right | | | E3TZ 18A491 B | $9.22 |
| 15 | Left | | | E3TZ 18A491 A | $35.58 |
| 16 | Motor, Blower | 93-9 | #.8 | F47Z 19805 A | $142.27 |
| | | 95-9 | #.8 | F57Z 19805 B | $103.05 |
| 17 | Fan, Blower | | #.8 | FOTZ 18504 A | $33.98 |
| | #R&R Complete | | | | |
| 18 | Gasket, Blower | | | E3TZ 18A477 A | $7.18 |
| 19 | Resistor, Blower | | | 4C2Z 19A706 BA | $32.80 |
| 20 | Tank, Vacuum | 93-9 | | .3 F29Z 19A566 A | $69.20 |
| | | 95-9 | | .3 F67Z 19A566 AA | $32.62 |

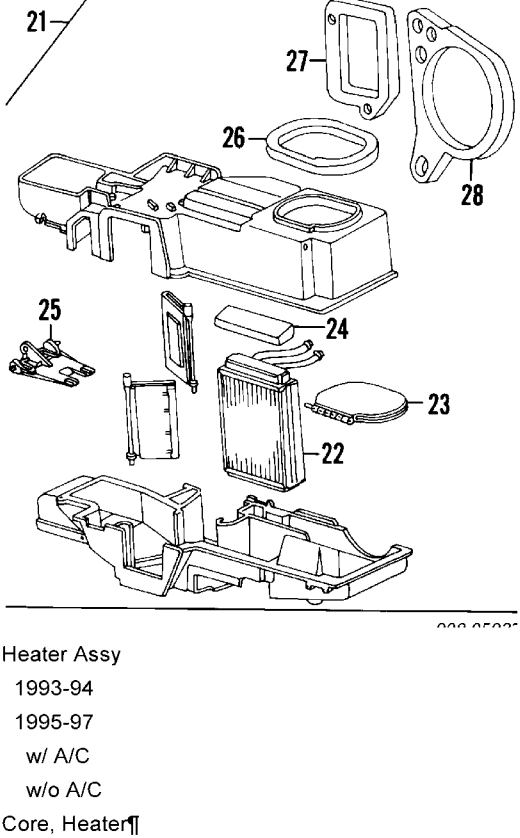


| | | | | | |
|---|---|---|---|---|---|
| 21 | Heater Assy | | | | |
| | 1993-94 | | #6.5 | E9TZ 18471 A | $214.65 |
| | 1995-97 | | | | |
| | w/ A/C | | #6.5 | 9L5Z 18471 A | $203.95 |
| | w/o A/C | | #6.5 | XL5Z 18471 EA | $191.85 |
| 22 | Core, Heater¶ | 93-9 | #7.1 | E9TZ 18476 A | $97.99 |
| | | 95-9 | #7.1 | F5TZ 18476 A | $97.26 |

#Includes R&I Instrument Panel

| | | | | | |
|---|---|---|---|---|---|
| 23 | Door, Damper¶ | | | E9TZ 19C802 A | $13.47 |
| 24 | Seal, Damper Door¶ | | | E9TZ 18658 A | $9.75 |
| 25 | Door, Defroster¶ | | | F1TZ 18A478 A | $7.73 |
| 26 | Seal, Chamber¶ | | | F3TZ 18C269 A | $7.23 |
| 27 | Seal, Panel¶ | | | F2TZ 18529 A | $23.40 |
| 28 | Seal, Blower¶ | | | E9TZ 18594 A | $17.77 |

¶Included w/Heater Assy

# STRIPE TAPE

NOTE: Labor times are for installation only.

## 1993-94 STX MODEL

### 2WD

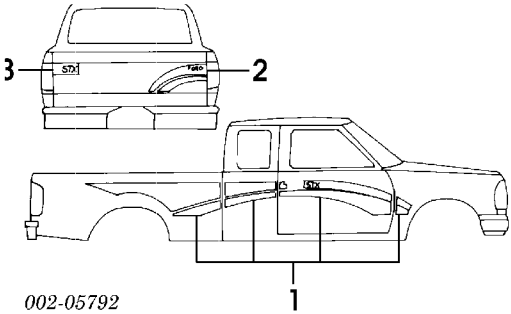


| | | |
|---|---|---|
| Install Fender Stripe | R | .2 |
| | L | .2 |
| Install Door Stripe | R | .4 |
| | L | .4 |
| Install Corner Panel Stripe | | |
| Regular Cab | R | .2 |
| | L | .2 |
| Super Cab | R | .3 |
| | L | .3 |
| Install Side Panel Stripe | R | .4 |
| | L | .4 |

| | | | | |
|---|---|---|---|---|
| 1 | Complete Vehicle¶ | | | |
| | Regular Cab | | | |
| | 6 Foot Bed | | F37Z 1020000 FP | $639.43 |
| | 7 Foot Bed | | F37Z 1020000 EP | $639.43 |
| | Super Cab | | F37Z 1320000 CP | $669.88 |
| 2 | Tailgate (a)¶ | .2 | F37Z 9942604 EP | $80.80 |
| 3 | Decal (a)¶ | | | |
| | "STX" | .1 | F37Z 9942528 BN | $57.42 |

¶Order by Application

(a) Included w/Complete Vehicle Stripe Tape

## 1993-94 STX MODEL

### 4WD

1997 Ford Ranger XLT Extended Cab Pickup

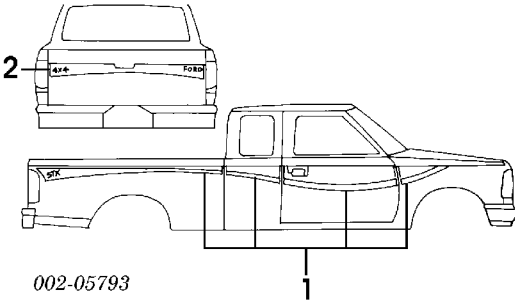

002-05793

| | | | | |
|---|---|---|---|---|
| Install Fender Stripe | R | .2 | | |
| | L | .2 | | |
| Install Door Stripe | R | .3 | | |
| | L | .3 | | |
| Install Corner Panel Stripe | | | | |
| Regular Cab | R | .2 | | |
| | L | .2 | | |
| Super Cab | R | .3 | | |
| | L | .3 | | |
| Install Side Panel Stripe | R | .4 | | |
| | L | .4 | | |
| 1 Side Body¶ | | | | |
| Regular Cab | | | | |
| 6 Foot Bed | | | F37Z 1020000 HF | $560.43 |
| 7 Foot Bed | | | F37Z 1020000 GF | $607.27 |
| Super Cab | | | F37Z 1320000 DF | $648.63 |
| 2 Tailgate¶ | | .2 | F37Z 9942604 AF | $94.12 |

¶Order by Application

XLT MODEL

RPO TYPE

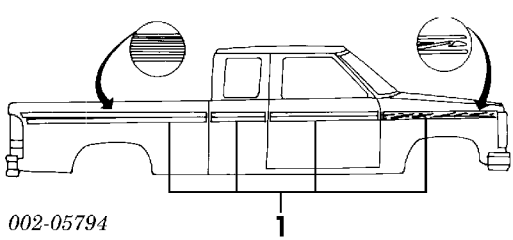

002-05794

| | | |
|---|---|---|
| Install Fender Stripe | R | .2 |
| | L | .2 |
| Install Door Stripe | R | .2 |
| | L | .2 |
| Install Corner Panel Stripe | R | .2 |
| | L | .2 |
| Install Side Panel Stripe | R | .3 |
| | L | .3 |
| 1 Stripe Kit¶ | | |

1997 Ford Ranger XLT Extended Cab Pickup

| | | | |
|---|---|---|---|
| 1993-94 | | | |
| Complete Vehicle | | | |
| Regular Cab | | | |
| 6 Foot Bed | | F37Z 1020000 KG | $478.82 |
| 7 Foot Bed | | F37Z 1020000 JG | $393.45 |
| Super Cab | | F37Z 1320000 EG | $408.88 |
| 1995-97 | | | |
| Body Side | | | |
| Regular Cab | | | |
| 6 Foot Bed | R | F57Z 1020000 BB | $97.50 |
| | L | F57Z 1020001 BB | $104.18 |
| 7 Foot Bed | R | F57Z 1020000 AB | $117.38 |
| | L | F57Z 1020001 AB | $127.70 |
| Super Cab | R | F57Z 1320000 AB | $116.15 |
| | L | F57Z 1320001 AB | $113.10 |

¶Order by Application

XLT MODEL

ACCENT TYPE

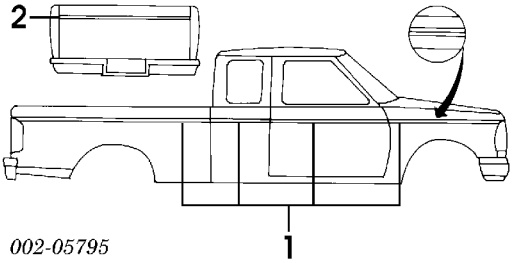


*002-05795*

| | | |
|---|---|---|
| Install Fender Stripe | R | .2 |
| | L | .2 |
| Install Door Stripe | R | .2 |
| | L | .2 |
| Install Corner Panel Stripe | R | .2 |
| | L | .2 |
| Install Side Panel Stripe | R | .3 |
| | L | .3 |

1 Side Body¶

| | | | |
|---|---|---|---|
| 1993-94 | | | |
| Regular Cab | | | |
| 6 Foot Bed | | F37Z 1020000 PG | $242.85 |
| 7 Foot Bed | | F37Z 1020000 NG | $289.43 |
| Super Cab | | F37Z 1320000 FG | $299.12 |
| 1995-96 | | | |
| Regular Cab | | | |
| 6 Foot Bed | R | F57Z 1020000 BA | $99.42 |
| | L | F57Z 1020001 BA | $100.18 |
| 7 Foot Bed | R | F57Z 1020000 AA | $80.20 |

| | | | | |
|---|---|---|---|---|
| | L | | F57Z 1020001 AA | $84.50 |
| Super Cab | R | | F57Z 1320000 AA | $135.37 |
| | L | | F57Z 1320001 AA | $134.45 |
| 1997 | | | | |
| Regular Cab | | | | |
| 6 Foot Bed | R | | F77Z 1020000 BAA | $100.10 |
| | L | | F77Z 1020001 BAA | $86.73 |
| 7 Foot Bed | R | | F77Z 1020000 AAA | $90.98 |
| | L | | F77Z 1020001 AAA | $87.63 |
| Super Cab | R | | F77Z 1320000 AAA | $126.08 |
| | L | | F77Z 1320001 AAA | $121.70 |
| 2 Tailgate¶ | 93-9 | .2 | F37Z 9942604 BG | $36.88 |
| | 95-9 | .2 | F57Z 9942604 AA | $35.68 |

¶Order by Application

## SPORT MODEL

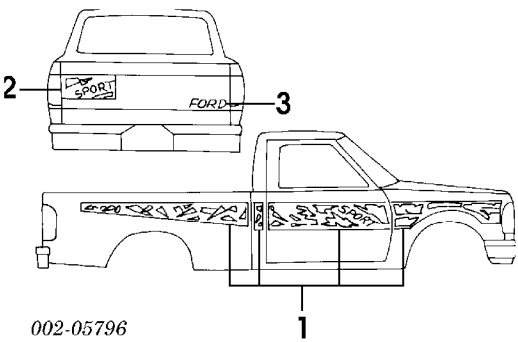


002-05796

| | | | |
|---|---|---|---|
| Install Fender Stripe | R | .3 | |
| | L | .3 | |
| Install Door Stripe | R | .4 | |
| | L | .4 | |
| Install Corner Panel Stripe | R | .2 | |
| | L | .2 | |
| Install Side Panel Stripe | R | .3 | |
| | L | .3 | |
| 1 Side Body¶ | | | |
| Regular Cab | | | |
| 6 Foot Bed | | | F37Z 1020000 MB $467.57 |
| 7 Foot Bed | | | F37Z 1020000 LB $469.83 |
| Tailgate Transfer¶ | | | |
| 2 "Sport" | | .2 | F37Z 9942528 CB $93.83 |
| 3 "Ford" | | .2 | F37Z 9942528 BY $31.48 |

¶Order by Application

## 1995-97 STX MODEL

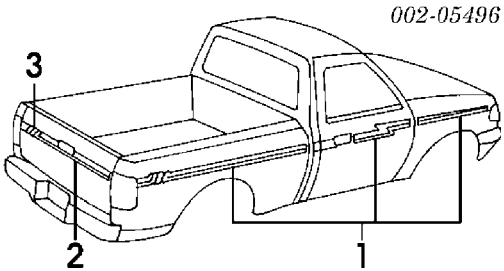


| | | | | |
|---|---|---|---|---|
| Install Fender Stripe | R | .2 | | |
| | L | .2 | | |
| Install Door Stripe | R | .3 | | |
| | L | .3 | | |
| Install Corner Panel Stripe | R | .2 | | |
| | L | .2 | | |
| Install Side Panel Stripe | R | .3 | | |
| | L | .3 | | |
| 1 Side Body¶ | | | | |
| 1995-96 | | | | |
| Regular Cab | | | | |
| 6 Foot Bed | R | | F57Z 1020000 DD | $517.05 |
| | L | | F57Z 1020001 DD | $511.93 |
| 7 Foot Bed | R | | F57Z 1020000 CD | $499.72 |
| | L | | F57Z 1020001 CD | $494.77 |
| Super Cab | R | | F57Z 1320000 BD | $649.92 |
| | L | | F57Z 1320001 BD | $689.80 |
| 1997 | | | | |
| Regular Cab | | | | |
| 6 Foot Bed | R | | F77Z 1020000 DAA | $207.25 |
| | L | | F77Z 1020001 DAA | $207.25 |
| 7 Foot Bed | R | | F77Z 1020000 CAA | $227.55 |
| | L | | F77Z 1020001 CAA | $220.48 |
| Super Cab | R | | F77Z 1320000 BAA | $230.93 |
| | L | | F77Z 1320001 BAA | $233.25 |
| 2 Tailgate¶ | | .2 | F57Z 9942604 BD | $189.40 |
| 3 Tailgate Transfer¶ | | .2 | F57Z 9942528 AD | $144.88 |

¶Order by Application

SPLASH MODEL

FLARESIDE

1997 Ford Ranger XLT Extended Cab Pickup

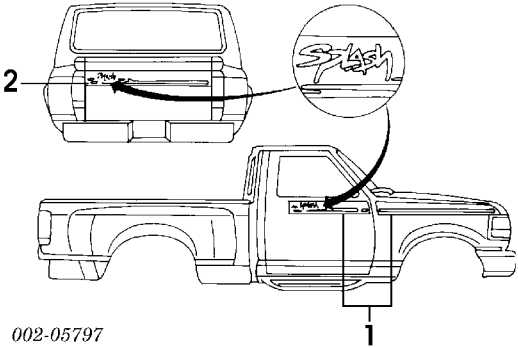


| | | | | | | |
|---|---|---|---|---|---|---|
| | Install Fender Stripe | | R | .2 | | |
| | | | L | .2 | | |
| | Install Door Stripe | | R | .2 | | |
| | | | L | .2 | | |
| 1 | Side Body | 93-9 | R | | F47Z 8320000 A | $148.18 |
| | | | L | | F47Z 8320001 A | $136.53 |
| | | 95-9 | R | | F67Z 8320000 A | $215.23 |
| | | | L | | F67Z 8320001 A | $228.47 |
| 2 | Tailgate | 93-9 | | .2 | F37Z 8342604 A | $139.22 |
| | | 95-9 | | .2 | F67Z 8342528 A | $67.72 |

# FRONT FENDER

Procedures 7, 8 and 28

SHEET METAL

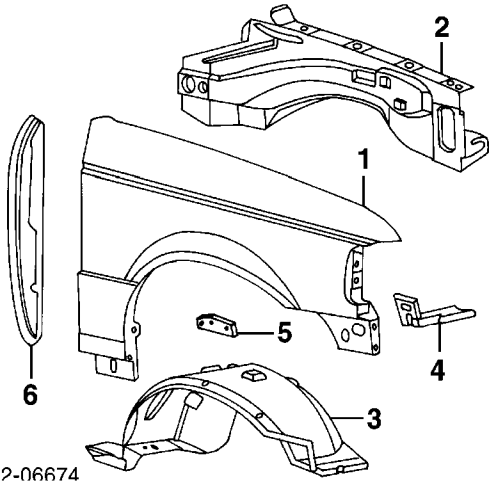


)02-06674

| | | | |
|---|---|---|---|
| Refinish Fender Outside | R | 2.5 | |
| | L | 2.5 | |
| Add to Edge Fender | R | .5 | |
| | L | .5 | |
| Refinish Fender Skirt | R | 1.5 | |
| | L | 1.5 | |
| R&I Fender | R | #1.5 | |
| | L | #1.5 | |

#Includes R&I/R&R Park/Side Marker Lamp

| | | | | | |
|---|---|---|---|---|---|
| 1 Fender | | | | | |
| w/Wheel Opening Mldgs | | R | #2.0 | F57Z 16005 EC | $284.20 |
| | | L | #2.0 | F67Z 16006 DA | $294.77 |
| w/o Wheel Opening Mldgs | | R | #1.8 | F67Z 16005 DA | $354.45 |
| | | L | #1.8 | F37Z 16006 A | $378.18 |

#Includes R&R Park/Side Marker Lamp & Wheel Opening Moulding

| | | | | | |
|---|---|---|---|---|---|
| 2 Apron, Fender | 93-9 | R | #4.0 | F37Z 16K006 A | $412.97 |
| | | L | #4.0 | F47Z 16K007 A | $309.48 |
| | 95-9 | R | #4.0 | F57Z 16K006 A | $238.82 |
| | | L | #4.0 | F57Z 16K007 A | $243.25 |

#w/Radiator Support Removed Deduct 1.0

| | | | | | |
|---|---|---|---|---|---|
| 3 Liner, Fender | 93-9 | R | #.6 | F37Z 16054 A | $61.67 |
| | | L | #.6 | F37Z 16055 A | $62.63 |

| | | | | | |
|---|---|---|---|---|---|
| | 95-9 | R | #.6 | F57Z 16054 B | $59.77 |
| | | L | #.6 | F57Z 16055 B | $64.62 |

#w/Fender Removed Deduct .3

| | | | | | |
|---|---|---|---|---|---|
| 4 Brace, Fender | | R | .1 | E9TZ 16A023 A | $6.45 |
| | | L | .1 | E9TZ 16A024 A | $7.17 |
| Insulator, Sound | | | | | |
| Right Only | 93-9 | | | E6TZ 16B280 A | $6.88 |
| | 95-9 | | | F57Z 16B280 A | $32.50 |
| 5 Shield, Alternator | | | | F47Z 10317 A | $15.56 |
| 6 Insulator, Fender | | R | | F37Z 16K171 A | $26.03 |
| | | L | | F37Z 16K171 A | $26.03 |

## EXTERIOR TRIM

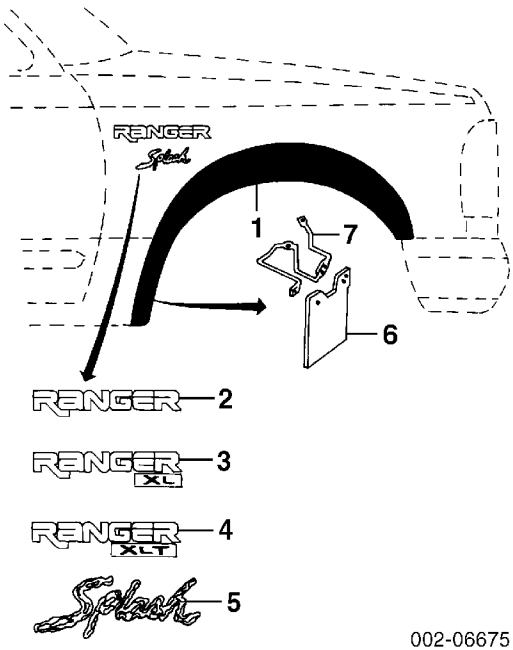


002-06675

| | | | | | |
|---|---|---|---|---|---|
| R&I Wheel Opening Mldg | | R | #.7 | | |
| | | L | #.7 | | |

#Includes R&R Fender Liner

| | | | | | |
|---|---|---|---|---|---|
| 1 Mldg, Wheel Opening | | | | | |
| Charcoal | | R | #.9 | 4L5Z 16038 AAPTM | $108.62 |
| | | L | #.9 | 4L5Z 16039 AAPTM | $97.85 |
| Opal | | R | #.9 | F37Z 16038 AY | $127.38 |
| | | L | #.9 | 4L5Z 16039 AAPTM | $97.85 |
| Titanium | | R | #.9 | 4L5Z 16038 AAPTM | $108.62 |
| | | L | #.9 | 4L5Z 16039 AAPTM | $97.85 |

#Includes R&R Fender Liner, w/Fender Removed Deduct
.7

| | | | | | | |
|---|---|---|---|---|---|---|
| | Nameplate | | | | | |
| 2 | "Ranger" | R | | .2 | E9TZ 16720 A | $23.70 |
| | | L | | .2 | E9TZ 16720 A | $23.70 |
| 3 | "Ranger XL" | R | | .2 | F37Z 16720 A | $42.40 |
| | | L | | .2 | F37Z 16720 A | $42.40 |
| 4 | "Ranger XLT" | R | | .2 | E9TZ 16720 C | $20.92 |
| | | L | | .2 | E9TZ 16720 C | $20.92 |
| 5 | Decal | | | | | |
| | "Splash" | R | #.1 | | F67Z 8342528 B | $53.07 |
| | | L | #.1 | | F67Z 8342528 B | $53.07 |
| | #Time is for Installation only | | | | | |
| 6 | Guard Kit, Fender Splash¶ | | | | | |
| | 2WD | | | .3 | F37Z 16A550 B | $27.13 |
| | 4WD | | | .3 | F37Z 16A550 A | $12.57 |
| | ¶Order by Application | | | | | |
| 7 | Brkt, Splash Guard | R | | | F37Z 16264 A | $28.33 |
| | | L | | | F37Z 16265 A | $32.33 |

Mldg, Grille Side-See Grille Section

## ELECTRICAL COMPONENTS

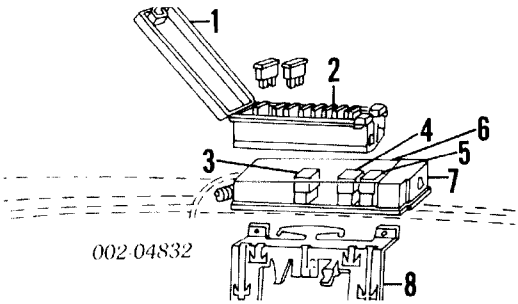


| | | | | | | |
|---|---|---|---|---|---|---|
| 1 | Cover, Fuse Panel | 93-9 | | | F37Z 14A003 A | $13.63 |
| | | 95-9 | | | F5TZ 14A003 B | $98.00 |
| 2 | Panel, Fuse-Serviced w/Wiring Harness | | | | | |
| 3 | Relay, A/C | | | .5 | FOAZ 14N089 A | $12.06 |
| 4 | Relay, EEC | | | .5 | FOAZ 14N089 A | $12.06 |
| 5 | Relay, Fuel Pump | | | .5 | FOAZ 14N089 A | $12.06 |
| 6 | Bracket, Fuel Pump Relay | | | | F1TZ 9C392 A | $37.50 |
| 7 | Cover, Connector | | | | E9TZ 14N003 F | $31.33 |
| 8 | Bracket, Mounting | | #.1 | | F1TZ 14B100 A | $34.36 |
| | #w/Fuse Panel Removed | | | | | |

# UNDERHOOD DIMENSIONS

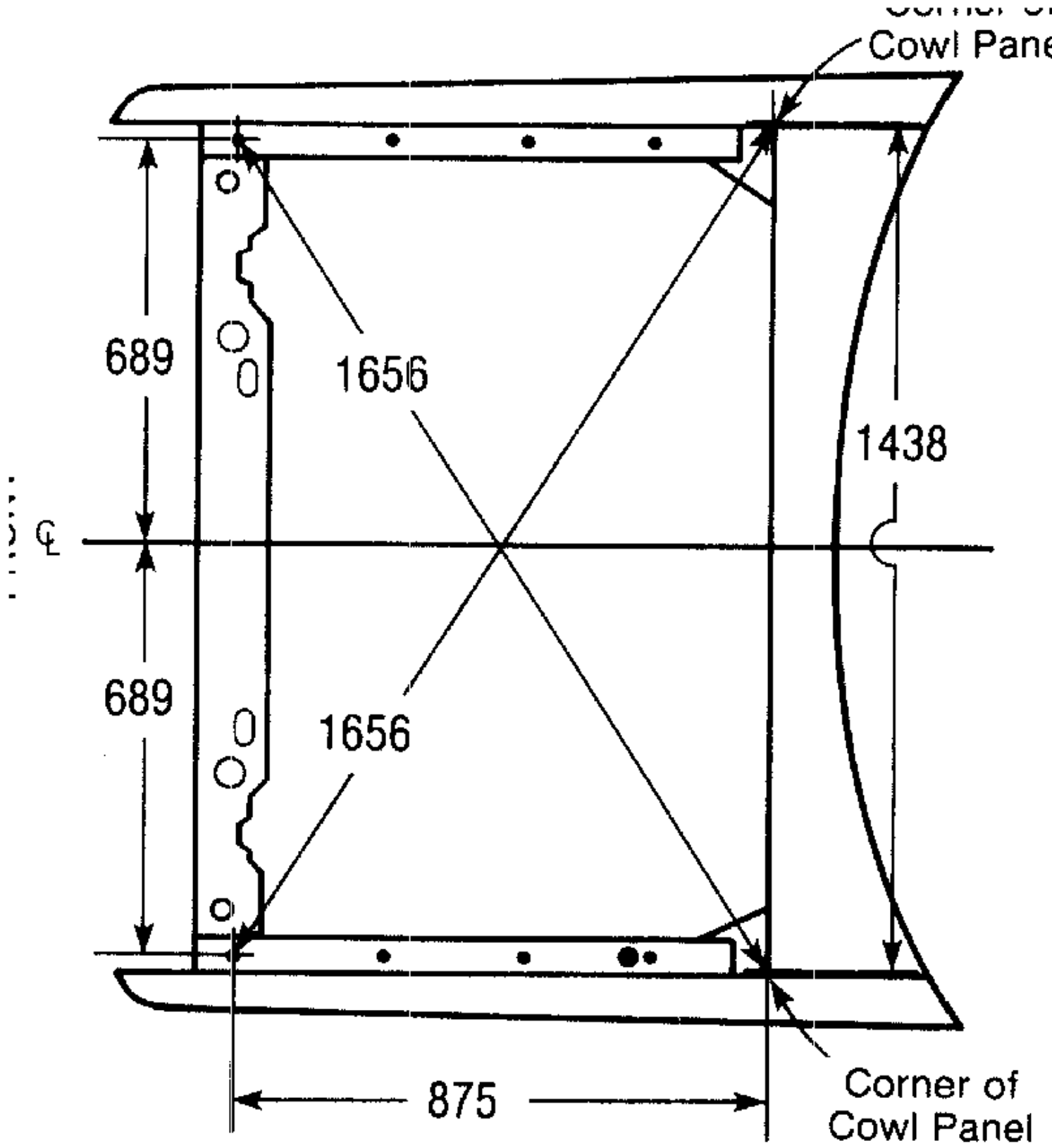

# AIR BAG SYSTEM

## Procedure 30

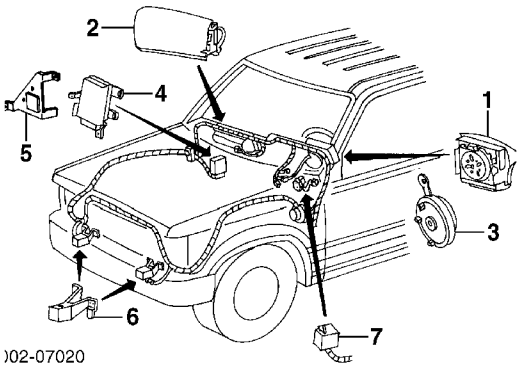


Disable & Enable Air Bag System .3

Diagnose Air Bag System (If Required) #1.0

#Includes R&I/R&R Driver Air Bag Module, Install Simulators, Connect Scan Tool and Retrieve/Clear Trouble Codes

Add to Diagnose Air Bag System

w/Pass Air Bag #.7

#Includes R&I/R&R Passenger Air Bag Module

NOTE 1: R&R Does Not include disable and enable or diagnose Air Bag System.

NOTE 2: Refer to Procedural Explanation 30 for Supplemental Restraint/Air Bag System Component Inspection and Replacement Information.

NOTE 3: For Air Bag System Service procedures, refer to Manufacturer's Service Repair Manual or Mitchell's Air Bag Service and Repair Manual.

Module, Air Bag

| | | | | |
|---|---|---|---|---|
| 1 | Driver Side | #.3 | F57Z 10043B13 A | $683.56 |
| | #Included in R&R Steering Wheel | | | |
| 2 | Passenger Side | | | |
| | Graphite | #.5 | F67Z 10044A74 AAD | $920.34 |
| | Lapis Blue | #.5 | F67Z 10044A74 AAA | $920.34 |
| | Saddle | #.5 | F67Z 10044A74 AAB | $920.34 |
| | Willow | #.5 | F67Z 10044A74 AAC | $920.34 |
| | #Included in R&R Instrument Panel | | | |

1997 Ford Ranger XLT Extended Cab Pickup

| | | | | | |
|---|---|---|---|---|---|
| 3 | Clockspring | | | | |
| | w/Cruise Control | | #.8 | F67Z 14A664 GA | $105.80 |
| | w/o Cruise Control | | #.8 | F67Z 14A664 FA | $110.83 |
| | #Includes R&R Steering Wheel, Included in O/H Steering Column | | | | |
| 4 | Monitor, Air Bag | | .5 | F67Z 14B215 A | $350.26 |
| 5 | Brkt, Monitor | | | F5TZ 14B058 A | $13.88 |
| | Sensor, Air Bag | | | | |
| 6 | Front | R | .3 | F5TZ 14B004 E | $115.60 |
| | | L | .3 | F5TZ 14B004 F | $115.60 |
| 7 | Center | | .5 | F5TZ 14B004 E | $115.60 |

# ABS/BRAKES

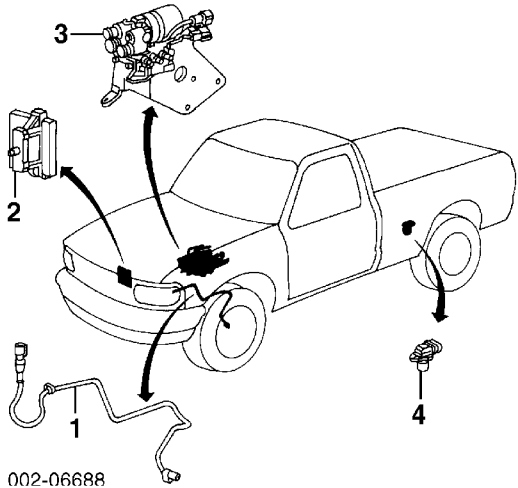


| | | | | | |
|---|---|---|---|---|---|
| Bleed System | | | .6 | | |

NOTE: R&R Does Not include bleed brake system.

Ring, Front ABS Sensor-See Front Suspension Section

| | | | | | | |
|---|---|---|---|---|---|---|
| 1 | Sensor, ABS Front | | | | | |
| | 2WD | R | #.5 | | F57Z 2C204 A | $127.46 |
| | | L | #.5 | | F57Z 2C204 A | $127.46 |
| | 4WD | R | #.5 | | F57Z 2C204 GD | $117.44 |
| | | L | #.5 | | F57Z 2C204 GD | $117.44 |
| | #R&R Both .8 | | | | | |
| 2 | Module, ABS Control | | #.5 | | F57Z 2C219 A | $598.64 |
| | Brkt, Module | | #.5 | | E9TZ 2C214 B | $103.18 |
| | #R&R Complete | | | | | |
| 3 | Actuator, ABS | | | 1.2 | F57Z 2C215 A | $1,361.67 |
| 4 | Sensor, ABS Rear Speed | | | .5 | F85Z 9E731 AB | $27.95 |

# CRUISE CONTROL SYSTEM

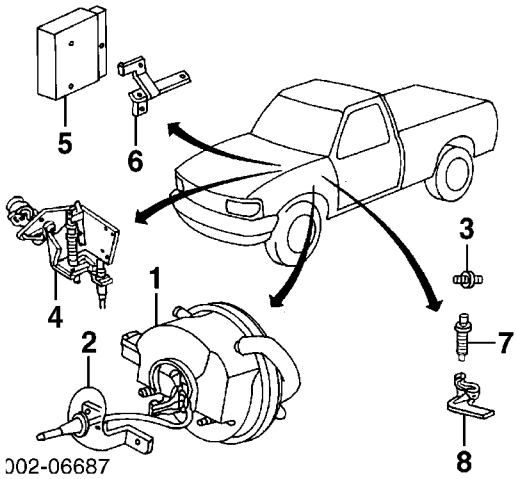


| | | | | | |
|---|---|---|---|---|---|
| 1 | Servo, Control | | | | |
| | 4 Cyl | | | | |
| | 1993-94 | | #.4 | F23Z 9C735 C | $157.40 |
| | 1995-97 | | | | |
| | Dealer Installed | | #.4 | F57Z 9C735 B | $128.46 |
| | Factory Installed | | #.4 | F87Z 9C735 HA | $424.22 |
| | 6 Cyl | | | | |
| | 1993-94 | | | | |
| | Dealer Installed | | #.4 | F23Z 9C735 C | $157.40 |
| | Factory Installed | | #.4 | E6AZ 9C735 A | $127.33 |
| | 1995-97 | | | | |
| | Dealer Installed | | #.4 | F57Z 9C735 B | $128.46 |
| | Factory Installed | | #.4 | F87Z 9C735 HA | $424.22 |
| 2 | Brkt, Control Servo | 93-9 | #.4 | F37Z 9C736 A | $19.63 |
| | | 95-9 | #.4 | F57Z 9C736 A | $13.20 |
| | #R&R Complete | | | | |
| 3 | Valve, Speed Control | | .2 | E3ZZ 9C793 B | $9.27 |
| 4 | Actuator¶ | | | | |
| | 4 Cyl | 93-9 | .3 | F47Z 9A825 KA | $57.75 |
| | | 95-9 | .3 | F67Z 9A825 MA | $50.65 |
| | 6 Cyl | | | | |
| | 3.0L Eng | 93-9 | .3 | F47Z 9A825 LA | $45.57 |
| | | 95-9 | .3 | F67Z 9A825 KA | $52.42 |
| | 4.0L Eng | 93-9 | .3 | F47Z 9A825 MB | $57.75 |
| | | 95-9 | .3 | F67Z 9A825 LA | $32.35 |
| | ¶Order by Application | | | | |
| 5 | Amplifier | | #.3 | F37Z 9D843 A | $170.67 |
| 6 | Bracket, Amplifier | | #.3 | E97Z 9D845 A | $23.60 |
| | #R&R Complete | | | | |
| 7 | Sensor, Speed | 93-9 | .3 | E9TZ 9E731 A | $48.53 |

1997 Ford Ranger XLT Extended Cab Pickup

| | | | | |
|---|---|---|---|---|
| | 95-9 | .3 | E9LZ 9E731 A | $45.04 |
| 8 Adapter, Actuator | | | F1TZ 9C962 B | $14.88 |

# FRAME

## Procedure 9

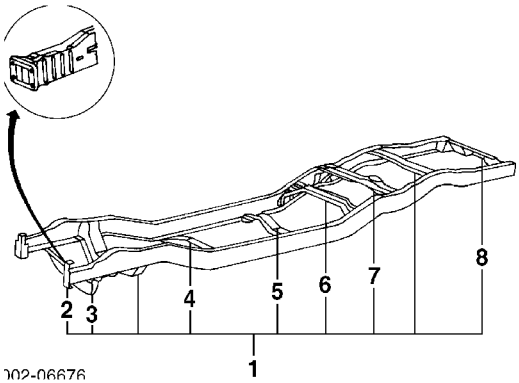


| | | | |
|---|---|---|---|
| Add to R&R Frame | | | |
| w/ A/C | .5 | | |
| w/Auto Trans | .6 | | |
| w/Pwr Strg, (2WD) | .8 | | |
| 1 Frame Assy | | | |
| 2WD | | | |
| 108" WB | 22.0 | F67Z 5005 RA | $1,359.70 |
| 114" WB | 22.0 | F67Z 5005 RB | $1,716.67 |
| 125" WB | 22.0 | F77Z 5005 RF | $976.88 |
| 4WD | | | |
| 108" WB | 24.8 | F77Z 5005 RC | $1,448.98 |
| 114" WB | 24.8 | F77Z 5005 RD | $1,221.40 |
| 125" WB | 24.8 | F77Z 5005 RG | $1,149.15 |
| 2 Ext Kit, Frame Horn¶ | | | |
| Regular Cab | | | |
| Right | #5.0 | F37Z 5B117 B | $1,069.37 |
| #Includes D&C Stabilizer Bar | | | |
| Left | #6.0 | F37Z 5B117 A | $919.32 |
| #Includes D&C Stabilizer Bar & R&I Steering Gear, w/Power Steering Add .5 | | | |
| Super Cab | | | |
| Right | #5.0 | F37Z 5B117 D | $1,060.77 |
| #Includes D&C Stabilizer Bar | | | |
| Left | #6.0 | F37Z 5B117 C | $1,060.77 |
| #Includes D&C Stabilizer Bar & R&I Steering Gear, w/Power Steering Add .5 | | | |
| 3 Crossmember, Front¶ | #.5 | F2TZ 5C128 C | $115.72 |

1997 Ford Ranger XLT Extended Cab Pickup

#Time is for Bolted Part, If Part is Welded, Add Time as Necessary

| | | | | |
|---|---|---|---|---|
| 4 | Crossmember, Trans Mount¶ | | | |
| | 4 Cyl | #.4 | E9TZ 6A023 E | $112.15 |
| | 6 Cyl | | | |
| | 3.0L Eng | | | |
| | 2WD | #.4 | E9TZ 6A023 E | $112.15 |
| | 4WD | #.4 | FOTZ 6A023 A | $130.45 |
| | 4.0L Eng | #.4 | FOTZ 6A023 A | $130.45 |

#Included in R&R Trans Mount

| | | | | |
|---|---|---|---|---|
| 5 | Crossmember No. 3¶ | | | |
| | 108", 114" WB | 2.0 | F2TZ 5025 C | $74.05 |
| | 125" WB | | | |
| | 2WD | 2.0 | F2TZ 5A051 A | $153.05 |
| 6 | Crossmember No. 4¶ | | | |
| | 108" WB | #2.0 | F2TZ 5026 B | $147.73 |
| | 114", 125" WB | #2.0 | F2TZ 5026 D | $147.73 |
| 7 | Crossmember No. 5¶ | #2.0 | FOTZ 5030 B | $157.13 |
| 8 | Crossmember, Rear¶ | #2.5 | FOTZ 5K007 A | $126.63 |

¶Included w/Frame Assy

#w/Pickup Bed Removed

# WHEEL

## Procedure 10

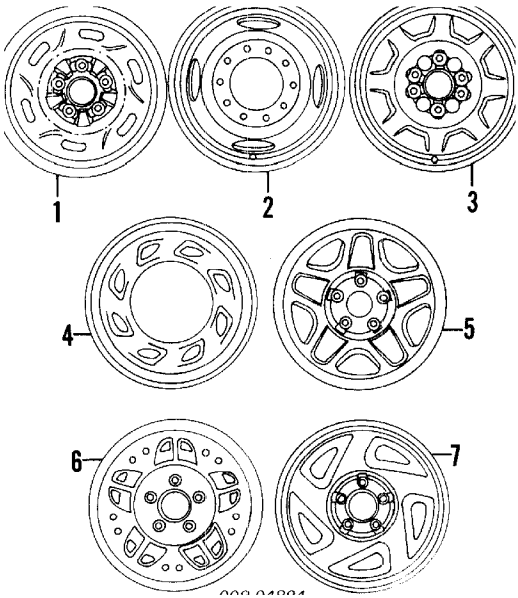


| | | | | | |
|---|---|---|---|---|---|
| | Refinish Wheel | | | | |
| | Single Color | | .5 | | |
| | 2 Tone | | 1.0 | | |
| | Add to R&I Spare Wheel & Tire Assy | | .2 | | |
| | Wheel, Steel | | | | |
| 1 | 14x5-1/2" | | .3 | F37Z 1015 A | $137.38 |
| 2 | 14x6" | 93-9 | .3 | F57Z 1015 A | $178.43 |
| | | 95-9 | .3 | F57Z 1015 A | $178.43 |
| 3 | 15x4-1/2" | | .3 | E99Z 1015 B | $100.45 |
| 4 | 15x6" | | .3 | YL2Z 1015 AA | $75.93 |
| 5 | 15x7" | | | | |
| | Styleside | | .3 | F67Z 1015 FA | $199.82 |
| | Flareside | | | | |
| | Chrome | | .3 | F67Z 1015 DA | $389.60 |
| | Painted | | .3 | F67Z 1015 FA | $199.82 |
| | Wheel, Aluminum | | | | |
| 6 | 14x6" | | .3 | F37Z 1007 A | $368.48 |
| 7 | 15x7" | | .3 | F47Z 1007 C | $324.95 |

## HUB CAPS

1997 Ford Ranger XLT Extended Cab Pickup

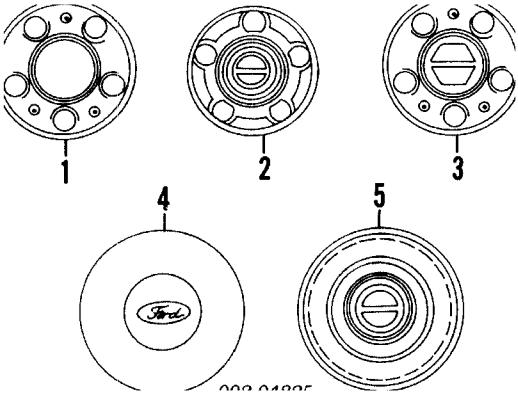


| | | | |
|---|---|---|---|
| | Cap, Hub | | |
| | 5-7/8" | | |
| 1 | Type 1 | | |
| | Chrome | F3TZ 1130 C | $54.33 |
| | Silver | F3TZ 1130 A | $37.82 |
| 2 | Type 2 | E3TZ 1130 G | $49.40 |
| 3 | Type 3 | F3TZ 1130 B | $33.65 |
| 4 | 6-1/2", (4WD) | | |
| | Front | F1TZ 1130 B | $50.87 |
| | Rear | F1TZ 1130 A | $47.92 |
| 5 | 7-1/8" | | |
| | 2WD | FO7Z 1130 A | $47.37 |
| | 4WD | | |
| | Front | E5TZ 1130 A | $63.60 |
| | Rear | FO7Z 1130 A | $47.37 |
| | 6-1/16" | | |
| | Front | F57Z 1130 FB | $59.12 |
| | Rear | F57Z 1130 EB | $38.82 |
| | 6-11/32" | | |
| | Painted | | |
| | w/Center Hole | F57Z 1130 BC | $44.90 |
| | w/o Center Hole | F57Z 1130 AC | $39.57 |
| | Chrome | | |
| | w/Center Hole | F57Z 1130 DC | $51.15 |
| | w/o Center Hole | F57Z 1130 CC | $35.72 |

# FRONT SUSPENSION

## Procedure 11

## 2WD

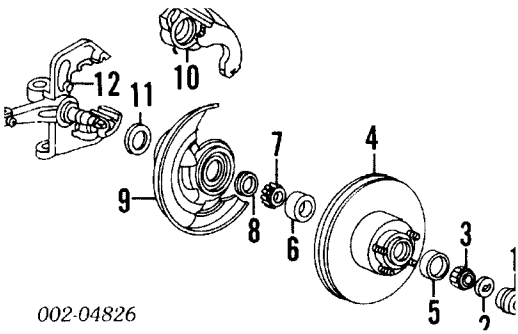


002-04826

| | | |
|---|---|---|
| R&I Suspension (One Side) | R | 2.0 |
| | L | 2.0 |
| O/H Suspension (Includes R&I) | | |
| One Side (Includes R&I) | R | 4.7 |
| | L | 4.7 |
| Both Sides (Includes R&I) | | 8.4 |
| Adjust Front Alignment | #2.4 | |

#Includes Check Rear Alignment

| | |
|---|---|
| Bleed Brake System | .3 |

NOTE 1: R&I/R&R or O/H Does Not include alignment or bleed brake system.

NOTE 2: All Parts in this section are included in overhaul unless noted otherwise.

| | | | | | |
|---|---|---|---|---|---|
| 1 | Cap, Grease | R | | LF 1131 B | $3.50 |
| | | L | | LF 1131 B | $3.50 |
| 2 | Washer, Bearing | R | #1.1 | E7TZ 1195 A | $3.14 |
| | | L | #1.1 | E7TZ 1195 A | $3.14 |
| 3 | Bearing, Outer | R | #1.1 | B5A 1216 A | $15.32 |
| | | L | #1.1 | B5A 1216 A | $15.32 |
| 4 | Hub & Rotor, Brake | | | | |
| | 1993-94 | R | #1.1 | YL5Z 1V102 EA | $85.85 |
| | | L | #1.1 | YL5Z 1V102 EA | $85.85 |
| | 1995-97 | | | | |
| | Rear Wheel ABS | R | #1.1 | YL5Z 1V102 AA | $105.68 |
| | | L | #1.1 | YL5Z 1V102 AA | $105.68 |
| | 4 Wheel ABS | R | #1.1 | YL5Z 1V102 BA | $114.92 |
| | | L | #1.1 | YL5Z 1V102 BA | $114.92 |

Ring, Front ABS Sensor-Serviced w/Brake Hub & Rotor

| | | | | | | |
|---|---|---|---|---|---|---|
| 5 | Cup, Outer Bearing | | R | #1.1 | B5A 1217 B | $16.65 |
| | | | L | #1.1 | B5A 1217 B | $16.65 |
| 6 | Cup, Inner Bearing | 93-9 | R | #1.1 | EOZZ 7F431 B | $19.08 |
| | | | L | #1.1 | EOZZ 7F431 B | $19.08 |
| | | 95-9 | R | #1.1 | B7C 1202 A | $24.97 |
| | | | L | #1.1 | B7C 1202 A | $24.97 |
| 7 | Bearing, Inner | 93-9 | R | #1.1 | EOZZ 7F431 B | $19.08 |
| | | | L | #1.1 | EOZZ 7F431 B | $19.08 |
| | | 95-9 | R | #1.1 | B7C 1201 A | $14.98 |
| | | | L | #1.1 | B7C 1201 A | $14.98 |
| 8 | Seal, Bearing | 93-9 | R | #1.1 | E5TZ 1S190 A | $7.98 |
| | | | L | #1.1 | E5TZ 1S190 A | $7.98 |
| | | 95-9 | R | #1.1 | FOZZ 1S190 A | $11.40 |
| | | | L | #1.1 | FOZZ 1S190 A | $11.40 |
| | #R&R One Side Complete, R&R Both Sides 2.0 | | | | | |
| 9 | Shield, Splash | 93-9 | R | #.2 | E9TZ 2K004 B | $42.00 |
| | | | L | #.2 | E9TZ 2K004 B | $42.00 |
| | | 95-9 | R | #.2 | F57Z 2K004 A | $139.83 |
| | | | L | #.2 | F57Z 2K004 A | $139.83 |
| | #w/Hub & Rotor Removed | | | | | |
| 10 | Caliper, Brake | 93-9 | R | #.5 | F79Z 2V120 CARM | $48.47 |
| | | | L | #.5 | F79Z 2V121 CARM | $48.47 |
| | | 95-9 | R | #.5 | F57Z 2B120 A | $151.43 |
| | | | L | #.5 | F57Z 2B121 AA | $146.23 |
| | #w/Hub & Rotor Removed Deduct .3 | | | | | |
| | Hose, Brake | | | | | |
| | 1993-94 | | R | #.3 | E9TZ 2078 A | $100.22 |
| | | | L | #.3 | E9TZ 2078 B | $69.48 |
| | 1995-97 | | | | | |
| | Rear Wheel ABS | | R | #.3 | F57Z 2078 C | $69.48 |
| | | | L | #.3 | F57Z 2078 E | $66.78 |
| | 4 Wheel ABS | | R | #.3 | F57Z 2078 C | $69.48 |
| | | | L | #.3 | F57Z 2078 D | $33.73 |
| | #w/Caliper Removed Deduct .2 | | | | | |
| 11 | Gasket, Spindle | | R | | E3TZ 2B160 A | $6.46 |
| | | | L | | E3TZ 2B160 A | $6.46 |
| 12 | Spindle | 93-9 | R | #2.6 | E9TZ 3105 B | $543.02 |
| | | | L | #2.6 | E9TZ 3106 B | $543.02 |
| | | 95-9 | R | #2.6 | F57Z 3105 A | $424.40 |
| | | | L | #2.6 | F57Z 3106 A | $413.70 |

#Includes R&R Hub, Rotor, Bearings & Splash Shield

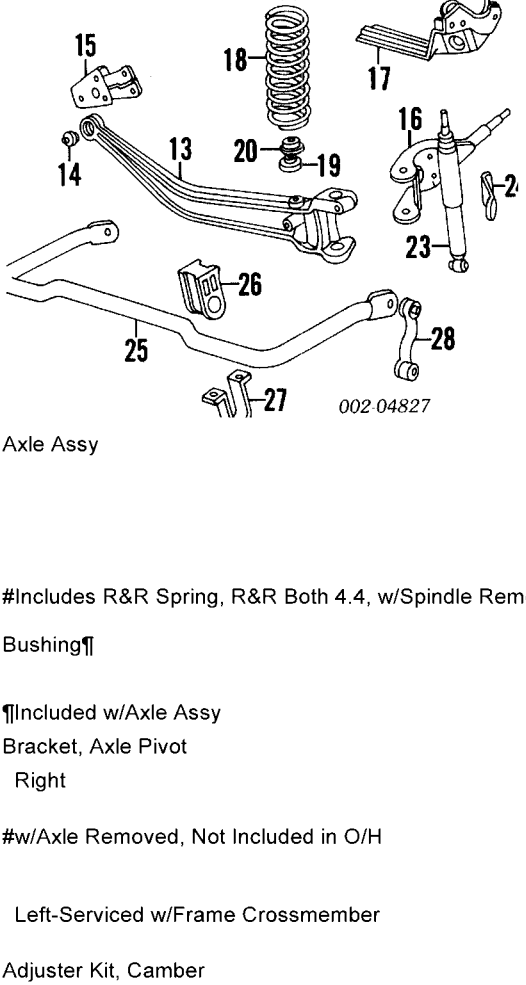


| | | | | | | |
|---|---|---|---|---|---|---|
| 13 | Axle Assy | 93-9 | R | #2.5 | E9TZ 3006 A | $388.88 |
| | | | L | #2.5 | E9TZ 3007 A | $436.35 |
| | | 95-9 | R | #2.5 | F57Z 3006 A | $418.70 |
| | | | L | #2.5 | F57Z 3007 A | $530.22 |

#Includes R&R Spring, R&R Both 4.4, w/Spindle Removed Deduct 1.3

| | | | | | | |
|---|---|---|---|---|---|---|
| 14 | Bushing¶ | | R | 2.7 | E4TZ 3B177 A | $12.98 |
| | | | L | 2.7 | E4TZ 3B177 A | $12.98 |

¶Included w/Axle Assy

| | | | | | |
|---|---|---|---|---|---|
| 15 | Bracket, Axle Pivot | | | | |
| | Right | | #.5 | E3TZ 3B178 A | $24.17 |

#w/Axle Removed, Not Included in O/H

Left-Serviced w/Frame Crossmember

| | | | | |
|---|---|---|---|---|
| Adjuster Kit, Camber | | | | |
| 0 Degree | R | # | 5C3Z 3B440 N | $21.98 |
| | L | # | 5C3Z 3B440 N | $21.98 |
| 1/2 Degree | R | # | 5C3Z 3B440 Q | $25.65 |
| | L | # | 5C3Z 3B440 Q | $25.65 |
| 1 Degree | R | # | 5C3Z 3B440 S | $25.65 |
| | L | # | 5C3Z 3B440 S | $25.65 |
| 1-1/2 Degree | R | # | 5C3Z 3B440 U | $23.82 |
| | L | # | 5C3Z 3B440 U | $23.82 |

#Included in Adjust Front Alignment

| | | | | | | |
|---|---|---|---|---|---|---|
| 16 | Arm, Radius | 93-9 | R | #2.3 | F57Z 3A360 A | $54.72 |
| | | | L | #2.3 | F57Z 3A360 A | $54.72 |
| | | 95-9 | R | #2.3 | F57Z 3A360 A | $54.72 |
| | | | L | #2.3 | F57Z 3A360 A | $54.72 |

#Includes R&R Shock Mtg Plate & Spring, w/Spindle Removed Deduct 1.3, w/Axle Removed Deduct 2.1

| | | | | | |
|---|---|---|---|---|---|
| 17 | Bracket, Radius Arm | R | #1.2 | FOTZ 3B095 A | $111.82 |
| | | L | #1.2 | FOTZ 3B095 B | $102.65 |

#w/Radius Arm Removed, Not Included in O/H

| | | | | | |
|---|---|---|---|---|---|
| 18 | Spring, Coil¶ | R | #.7 | F37Z 5310 F | $95.25 |
| | | L | #.7 | F37Z 5310 F | $95.25 |

¶Order by Spring Code

| | | | | | |
|---|---|---|---|---|---|
| 19 | Seat, Spring | R | #.7 | FOTZ 5A307 A | $7.98 |
| | | L | #.7 | FOTZ 5A307 A | $7.98 |
| 20 | Insulator | R | #.7 | F2TZ 5414 A | $9.98 |
| | | L | #.7 | F2TZ 5414 A | $9.98 |
| 21 | Retainer, Spring | R | #.7 | EOTZ 5B300 A | $9.98 |
| | | L | #.7 | EOTZ 5B300 A | $9.98 |

#R&R One Side Complete, R&R Both Sides 1.1

| | | | | | |
|---|---|---|---|---|---|
| 22 | Housing, Spring | R | #1.5 | F37Z 5A306 A | $48.62 |
| | | L | #1.5 | F37Z 5A306 C | $68.63 |

#w/Spring & Necessary Bolted Parts Removed, Not Included in O/H

| | | | | | |
|---|---|---|---|---|---|
| 23 | Absorber, Shock¶ | R | #.5 | 5U2Z 18V124 ACA | |
| | | L | #.5 | 5U2Z 18V124 ACA | |

¶Order by Application

#R&R Both .8, w/Radius Arm Removed Deduct .3

| | | | | | |
|---|---|---|---|---|---|
| 24 | Plate, Shock Mounting | R | | E3TZ 18126 A | $9.93 |
| | | L | | E3TZ 18126 A | $9.93 |
| 25 | Bar, Stabilizer | | #.8 | F3TZ 5482 A | $135.33 |

#Includes R&R Bar Insulators, Stab Brackets & Stab Bar Links, Deduct .2 w/Each Axle Removed, Not Included in O/H

| | | | | | |
|---|---|---|---|---|---|
| 26 | Insulator, Bar | R | #.6 | F37Z 5493 A | $12.82 |
| | | L | #.6 | F37Z 5493 A | $12.82 |

#Includes R&R Stab Bracket, Not Included in O/H

| | | | | | |
|---|---|---|---|---|---|
| 27 | Bracket, Stabilizer | R | #.2 | F1TZ 5486 A | $27.58 |
| | | L | #.2 | F1TZ 5486 A | $27.58 |

#Not Included in O/H

| | | | | | | |
|---|---|---|---|---|---|---|
| 28 | Link, Stabilizer Bar | 93-9 | R | #.5 | F57Z 5K483 EA | $27.48 |
| | | | L | #.5 | F57Z 5K483 EA | $27.48 |
| | | 95-9 | R | #.5 | 2L2Z 5K483 BA | $5.13 |
| | | | L | #.5 | 2L2Z 5K483 BA | $5.13 |

#Deduct .2 w/Each Axle Removed, Not Included in O/H

4WD

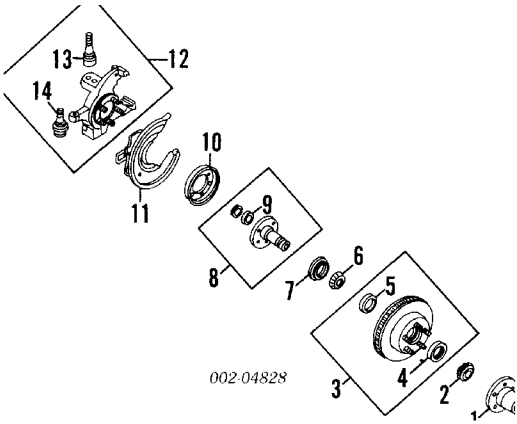


| | | | |
|---|---|---|---|
| R&I Suspension/Axle Assy | | | 2.7 |
| O/H Suspension | | | |
| One Side | R | | 4.9 |
| | L | | 4.8 |
| Both Sides | | | 8.7 |
| Adjust Front Alignment | | #2.4 | |

#Includes Check Rear Alignment

Add to Adjust Front Alignment

To Install Adjuster Kit

| | | |
|---|---|---|
| One Side | R | .6 |
| | L | .6 |
| Both Sides | | 1.0 |
| Bleed Brake System | | .3 |

NOTE 1: R&I/R&R or O/H Does Not include alignment or bleed brake system.

NOTE 2: All Parts in this section are included in overhaul unless noted otherwise.

| | | | | | | |
|---|---|---|---|---|---|---|
| 1 | Lock Assy, Hub | | | | | |
| | Man Locking | | R | #.6 | FOTZ 3B396 A | $194.98 |
| | | | L | #.6 | FOTZ 3B396 A | $194.98 |
| | Auto Locking | | R | #.6 | F3TZ 3B396 B | $385.68 |
| | | | L | #.6 | F3TZ 3B396 B | $385.68 |

#R&R Both .9

Body¶

| | | | | | |
|---|---|---|---|---|---|
| Man Locking | | R | .6 | FOTZ 1K105 A | $72.10 |
| | | L | .6 | FOTZ 1K105 A | $72.10 |

Repair Kit¶

| | | | | | |
|---|---|---|---|---|---|
| Man Locking | | R | .6 | FOTZ 1K106 A | $12.98 |
| | | L | .6 | FOTZ 1K106 A | $12.98 |
| Auto Locking | | R | .6 | F3TZ 1K106 A | $36.83 |
| | | L | .6 | F3TZ 1K106 A | $36.83 |

¶Included w/Hub Lock Assy

| | | | | | | |
|---|---|---|---|---|---|---|
| 2 | Bearing, Outer Wheel | | R | #1.4 | XW4Z 4221 AA | $23.30 |
| | | | L | #1.4 | XW4Z 4221 AA | $23.30 |
| 3 | Rotor Assy, Brake | 93-9 | R | #1.4 | YL2Z 1V102 DA | $103.02 |
| | | | L | #1.4 | YL2Z 1V102 DA | $103.02 |
| | | 95-9 | R | #1.4 | YL5Z 1V102 CA | $135.17 |
| | | | L | #1.4 | YL5Z 1V102 CA | $135.17 |
| 4 | Cup, Outer Bearing¶ | | R | #1.4 | B7A 4222 B | $20.33 |
| | | | L | #1.4 | B7A 4222 B | $20.33 |
| 5 | Cup, Inner Bearing¶ | | R | #1.4 | B7A 4222 B | $20.33 |
| | | | L | #1.4 | B7A 4222 B | $20.33 |

¶Included w/Brake Rotor Assy

| | | | | | | |
|---|---|---|---|---|---|---|
| 6 | Bearing, Inner Wheel | | R | #1.4 | XW4Z 4221 AA | $23.30 |
| | | | L | #1.4 | XW4Z 4221 AA | $23.30 |
| 7 | Seal, Bearing | | R | #1.4 | E4TZ 1S190 A | $7.98 |
| | | | L | #1.4 | E4TZ 1S190 A | $7.98 |
| 8 | Spindle Assy | 93-9 | R | #1.4 | E3TZ 3105 B | $232.03 |
| | | | L | #1.4 | E3TZ 3105 B | $232.03 |
| | | 95-9 | R | #1.4 | F57Z 3105 C | $311.48 |
| | | | L | #1.4 | F57Z 3105 C | $311.48 |
| 9 | Bearing, Spindle¶ | | R | #1.4 | C6TZ 3123 A | $19.97 |
| | | | L | #1.4 | C6TZ 3123 A | $19.97 |

¶Included w/Spindle Assy

| | | | | | | |
|---|---|---|---|---|---|---|
| 10 | Shield, Spindle | 93-9 | R | #1.4 | FOTZ 1214 A | $43.67 |
| | | | L | #1.4 | FOTZ 1214 A | $43.67 |
| | | 95-9 | R | #1.4 | F57Z 1214 A | $66.18 |
| | | | L | #1.4 | F57Z 1214 A | $66.18 |

#R&R One Side Complete, Includes R&R Hub Lock Assy, R&R Both Sides 2.6

| | | | | | | |
|---|---|---|---|---|---|---|
| 11 | Shield, Splash | | R | #.2 | FOTZ 2K004 A | $18.98 |
| | | | L | #.2 | FOTZ 2K004 A | $18.98 |

#w/Rotor Removed

| | | | | | | |
|---|---|---|---|---|---|---|
| | Caliper, Brake | 93-9 | R | #.5 | F79Z 2V120 CARM | $48.47 |
| | | | L | #.5 | F79Z 2V121 CARM | $48.47 |
| | | 95-9 | R | #.5 | F57Z 2B120 A | $151.43 |

| | | | | | |
|---|---|---|---|---|---|
| | | L | #.5 | F57Z 2B121 AA | $146.23 |

#w/Rotor Removed Deduct .3

| | | | | | | |
|---|---|---|---|---|---|---|
| 12 | Arm Assy, Spindle | 93-9 | R | #3.2 | F3TZ 3130 E | $394.28 |
| | | | L | #3.1 | F3TZ 3131 E | $421.58 |
| | | 95-9 | R | #3.2 | F57Z 3130 A | $456.20 |
| | | | L | #3.1 | F57Z 3131 A | $456.20 |

#Includes R&R Hub & Rotor, Spindle, Bearings & Splash Shield, w/Support Arm Removed Deduct 2.0

| | | | | | |
|---|---|---|---|---|---|
| 13 | Ball Joint, Upper¶ | R | #3.4 | FOTZ 3049 B | $58.98 |
| | | L | #3.3 | FOTZ 3049 B | $58.98 |
| 14 | Ball Joint, Lower¶ | R | #3.4 | FOTZ 3050 A | $57.85 |
| | | L | #3.3 | FOTZ 3050 A | $57.85 |

¶Included w/Spindle Arm Assy

#R&R One Side Complete, w/Support Arm Removed Deduct 2.0

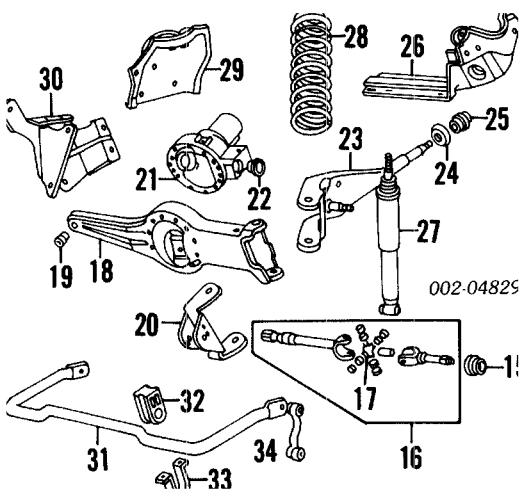


| | | | | | | |
|---|---|---|---|---|---|---|
| 15 | Seal, Axle | | R | #.9 | E3TZ 1S175 A | $31.78 |
| | | | L | #.9 | E3TZ 1S175 A | $31.78 |
| 16 | Shaft Assy, Axle | 93-9 | R | #.9 | FOTZ 3219 A | $377.80 |
| | | | L | #.9 | FOTZ 3220 A | $350.07 |
| | | 95-9 | R | #.9 | F57Z 3219 A | $313.52 |
| | | | L | #.9 | F57Z 3220 B | $368.78 |

#R&R Complete, Not Included in O/H, w/Spindle Arm Assy Removed Deduct .6

| | | | | | |
|---|---|---|---|---|---|
| 17 | U-Joint¶ | R | #1.3 | D3TZ 3249 A | $44.98 |
| | | L | #1.3 | D3TZ 3249 A | $44.98 |

¶Included w/Axle Shaft Assy

#Not Included in O/H, Includes R&I Axle Shaft, w/Spindle Arm Assy Removed Deduct .6

| | | | | | | |
|---|---|---|---|---|---|---|
| 18 | Support Assy, Arm | | R | #3.4 | F57Z 3B402 A | $657.28 |
| | | | L | #4.4 | F57Z 3B403 A | $898.12 |
| 19 | Bushing, Arm¶ | | R | #3.6 | E1TZ 3B177 A | $12.98 |
| | | | L | #4.6 | E1TZ 3B177 A | $12.98 |

¶Included w/Arm Support Assy

#Includes R&R Spring, Axle Shaft, Hub & Rotor, Not Included in O/H

| | | | | | | |
|---|---|---|---|---|---|---|
| 20 | Retainer, Arm | | R | #1.0 | F2TZ 5486 A | $12.82 |
| | | | L | #1.0 | F2TZ 5486 A | $12.82 |

#Not Included in O/H, w/Bar Link Removed Deduct .1, w/Spring Removed Deduct .7

| | | | | | | |
|---|---|---|---|---|---|---|
| 21 | Housing, Carrier | | | #3.6 | FOTZ 3010 A | $447.90 |
| | #Not Included in O/H | | | | | |
| 22 | Seal, Axle Shaft | 93-9 | R | #.1 | E3TZ 3254 C | $7.00 |
| | | | L | #.1 | E4TZ 3254 B | $7.99 |
| | | 95-9 | R | #.1 | E3TZ 3254 A | $8.18 |
| | | | L | #.1 | E3TZ 3254 B | $6.98 |

#w/Axle Shaft Assy Removed, Included in R&R Carrier Housing, Not Included in O/H

| | | | | | | |
|---|---|---|---|---|---|---|
| 23 | Arm, Radius | 93-9 | R | #2.3 | F3TZ 3A360 C | $76.10 |
| | | | L | #2.3 | F3TZ 3A360 C | $76.10 |
| | | 95-9 | R | #2.3 | F57Z 3A360 B | $62.47 |
| | | | L | #2.3 | F57Z 3A360 B | $62.47 |
| 24 | Bushing, Radius Arm | | R | #2.3 | EOTZ 3B186 B | $6.00 |
| | | | L | #2.3 | EOTZ 3B186 B | $6.00 |
| 25 | Insulator, Radius Arm | | R | #2.3 | E7TZ 3B203 A | $12.82 |
| | | | L | #2.3 | E7TZ 3B203 A | $12.82 |

#R&R One Side Complete, Includes R&R Spring, w/Support Arm Removed Deduct 2.1

| | | | | | | |
|---|---|---|---|---|---|---|
| 26 | Bracket, Radius Arm | | R | #1.2 | FOTZ 3B095 A | $111.82 |
| | | | L | #1.2 | FOTZ 3B095 B | $102.65 |

#w/Radius Arm Removed, Not Included in O/H

| | | | | | | |
|---|---|---|---|---|---|---|
| | Adjuster Kit, Camber | | | | | |
| | 0 Degree | | R | #.6 | 5C3Z 3B440 N | $21.98 |
| | | | L | #.6 | 5C3Z 3B440 N | $21.98 |
| | 1/2 Degree | | R | #.6 | 5C3Z 3B440 Q | $25.65 |
| | | | L | #.6 | 5C3Z 3B440 Q | $25.65 |
| | 1 Degree | | R | #.6 | 5C3Z 3B440 S | $25.65 |
| | | | L | #.6 | 5C3Z 3B440 S | $25.65 |

| | | | | | | |
|---|---|---|---|---|---|---|
| | 1-1/2 Degree | | R | #.6 | 5C3Z 3B440 U | $23.82 |
| | | | L | #.6 | 5C3Z 3B440 U | $23.82 |
| | #R&R Both Sides 1.0 | | | | | |
| 27 | Absorber, Shock | 93-9 | R | #.5 | 5U2Z 18V124 ACA | |
| | | | L | #.5 | 5U2Z 18V124 ACA | |
| | | 95-9 | R | #.5 | 5U2Z 18V124 ACA | |
| | | | L | #.5 | 5U2Z 18V124 ACA | |
| | #R&R Both .8, w/Radius Arm Removed Deduct .3 | | | | | |
| 28 | Spring, Coil¶ | | R | #.7 | F37Z 5310 F | $95.25 |
| | | | L | #.7 | F37Z 5310 F | $95.25 |
| | ¶Order by Spring Code | | | | | |
| | #R&R Both 1.1 | | | | | |
| 29 | Housing, Spring | 93-9 | R | #1.5 | F37Z 5A306 B | $107.07 |
| | | | L | #1.5 | F37Z 5A306 D | $32.12 |
| | | 95-9 | R | #1.5 | F57Z 5A306 B | $34.27 |
| | | | L | #1.5 | F57Z 5A306 A | $34.27 |
| | #w/Spring & Necessary Bolted Parts Removed, Not Included in O/H | | | | | |
| 30 | Bracket, Support Arm | | R | #.5 | F3TZ 3B178 A | $65.18 |
| | | | L | #.5 | F3TZ 3B178 A | $65.18 |
| | #w/Arm Removed, Not Included in O/H | | | | | |
| 31 | Bar, Stabilizer | | | #.8 | F3TZ 5482 A | $135.33 |
| | #Includes R&R Bar Insulators, Bar Brackets & Bar Links, Deduct .2 w/Each Radius Arm Removed, Not Included in O/H | | | | | |
| 32 | Insulator, Bar | | R | #.6 | F37Z 5493 A | $12.82 |
| | | | L | #.6 | F37Z 5493 A | $12.82 |
| | #Includes R&R Bar Bracket, Not Included in O/H | | | | | |
| 33 | Bracket, Bar | | R | #.2 | FOTZ 5486 B | $25.65 |
| | | | L | #.2 | FOTZ 5486 B | $25.65 |
| | #Not Included in O/H | | | | | |
| 34 | Link, Bar | | R | #.5 | F57Z 5K483 FA | $27.48 |
| | | | L | #.5 | F57Z 5K483 FA | $27.48 |
| | #Deduct .2 w/Each Radius Arm Removed, Not Included in O/H | | | | | |

# STEERING LINKAGE

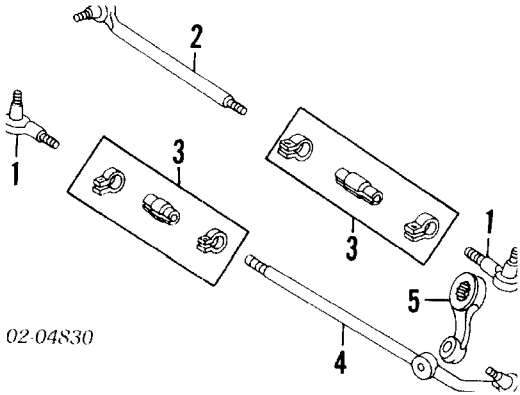


NOTE: R&R Does Not include adjust wheel alignment.

| | | | | |
|---|---|---|---|---|
| 1 End, Tie Rod Outer | | | | |
| 2WD | R | #.4 | F2TZ 3A131 F | $89.05 |
| | L | #.4 | F2TZ 3A131 C | $88.88 |
| 4WD | R | #.4 | FOTZ 3A131 A | $62.17 |
| | L | #.4 | FOTZ 3A131 B | $75.05 |
| 2 End, Tie Rod Inner | | | | |
| 2WD | R | #.4 | F2TZ 3A130 E | $169.38 |
| | L | #.4 | F2TZ 3A130 E | $169.38 |
| 4WD | R | #.4 | FOTZ 3A130 A | $88.48 |
| | L | #.4 | FOTZ 3A130 A | $88.48 |

#R&R Both One Side .5, Includes R&R Adjusting Tube

| | | | | |
|---|---|---|---|---|
| 3 Tube, Adjusting | R | | E7TZ 3281 C | $53.43 |
| | L | | E7TZ 3281 B | $51.53 |
| 4 Link, Center | | | | |
| 2WD | | #.5 | F2TZ 3304 C | $205.43 |
| 4WD | | #.5 | FOTZ 3304 A | $150.95 |

#Includes R&R Outer End & Adjusting Tube

| | | | |
|---|---|---|---|
| 5 Arm, Pitman | | | |
| Man Strg | | | |
| 2WD | .7 | E3TZ 3590 C | $74.38 |
| 4WD | .7 | E3TZ 3590 E | $80.28 |
| Pwr Strg | | | |
| 2WD | .7 | E3TZ 3590 A | $87.23 |
| 4WD | | | |
| w/Highrider Pkg | .7 | E7TZ 3590 A | $97.28 |
| w/o Highrider Pkg | .7 | FOTZ 3590 A | $109.27 |

# STEERING WHEEL/COLUMN

## FIXED WHEEL

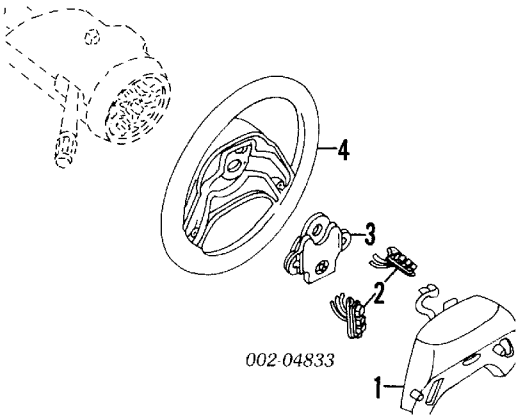


| | |
|---|---|
| Refinish Lock Housing Cover | |
| Complete | .5 |
| Upper | .3 |
| Lower | .3 |
| R&I Steering Column | 1.4 |
| O/H Steering Column (Includes R&I) | 2.4 |

NOTE: All Parts in this section are included in overhaul unless noted otherwise.

| | | | | | |
|---|---|---|---|---|---|
| 1 | Switch, Horn | | | | |
| | w/Cruise Control | | #.3 | F37Z 13A805 B | $100.67 |
| | w/o Cruise Control | | #.3 | F37Z 13A805 A | $83.27 |
| | Module, Air Bag-See Air Bag System Section | | | | |
| 2 | Switch, Speed Control | 93-9 | #.3 | F37Z 9C888 BA | $153.96 |
| | | 95 | #.3 | F57Z 9C888 AG | $114.22 |
| | | 96-9 | #.3 | F67Z 9C888 BC | $176.98 |
| 3 | Damper | | | | |
| | Man Trans | | # | F3TZ 3F690 A | $40.30 |
| | Auto Trans | | # | F3TZ 3F690 C | $251.23 |
| | #Included in R&R Steering Wheel | | | | |
| 4 | Wheel, Steering | | | | |
| | Leather | 93-9 | .6 | F4TZ 3600 D | $247.25 |
| | | 95-9 | .6 | F77Z 3600 AA | $386.28 |
| | Vinyl | | | | |
| | 1993-94 | | .6 | F47Z 3600 A | $174.53 |
| | 1995-97 | | | | |
| | w/Cruise Control | | .6 | F87Z 3600 DAA | $201.88 |

| | | | | |
|---|---|---|---|---|
| w/o Cruise Control | | .6 | F87Z 3600 AAD | $181.45 |

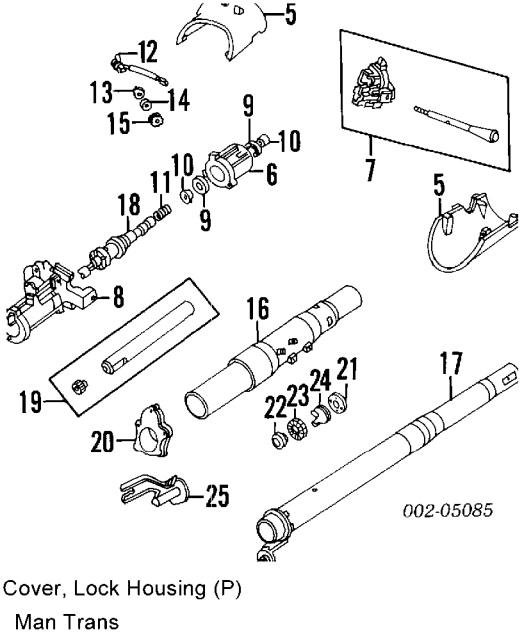


| | | | | |
|---|---|---|---|---|
| 5 Cover, Lock Housing (P) | | | | |
| Man Trans | | | | |
| Upper | 93-9 | #.3 | E9TZ 3530 E | $48.42 |
| | 95-9 | #.3 | F57Z 3530 B | $19.57 |
| Lower | 93-9 | #.3 | F2TZ 3530 C | $56.58 |
| | 95-9 | #.3 | F57Z 3530 D | $22.58 |
| Auto Trans | | | | |
| Upper | 93-9 | #.3 | E9TZ 3530 A | $46.78 |
| | 95-9 | #.3 | F57Z 3530 A | $19.57 |
| Lower | 93-9 | #.3 | F2TZ 3530 A | $71.05 |
| | 95-9 | #.3 | F57Z 3530 D | $22.58 |
| (P) Paint to Match | | | | |
| #R&R Complete | | | | |
| 6 Flange, Upper | | | | |
| w/Cruise Control | | 2.0 | F2TZ 3511 A | $26.18 |
| w/o Cruise Control | | 2.0 | E9TZ 3511 C | $14.17 |
| 7 Switch Assy, Turn Signal | 93-9 | .7 | F2TZ 13341 B | $335.27 |
| | 95-9 | .7 | YL5Z 13K359 BAA | $121.94 |
| Switch, Wiper¶ | | .7 | E3DZ 17A553 C | $51.11 |
| ¶Included w/Turn Signal Switch Assy | | | | |
| 8 Flange, Lower | | | | |
| w/Cruise Control | | .8 | F2TZ 3511 B | $413.67 |
| w/o Cruise Control | | .8 | E9TZ 3511 D | $229.70 |
| 9 Bearing (2) | | .7 | E9TZ 3517 B | $6.75 |
| 10 Ring, Bearing (2) | | | E9TZ 3L539 A | $4.37 |
| 11 Spring, Bearing | | | E9TZ 3520 A | $4.75 |

| | | | | | |
|---|---|---|---|---|---|
| | Cyl & Keys, Lock¶ | | | F37Z 1022050 A | $142.87 |
| | ¶Complete Vehicle, Order by Application | | | | |
| 12 | Cylinder, Ignition Lock (a) | | #.5 | F3TZ 11582 A | $81.33 |
| | (a) Order by Application | | | | |
| | #Time is to Replace Undamaged Lock Cylinder | | | | |
| 13 | Retainer | | | EOAZ 3C610 A | $4.78 |
| 14 | Bearing, Cylinder | | | EOAZ 3E700 A | $24.03 |
| 15 | Gear, Lock | | | D8BZ 3E717 A | $48.80 |
| | Switch, Ignition | | .7 | F2TZ 11572 F | $35.11 |
| 16 | Tube, Column | | | | |
| | Man Trans | | 1.8 | E9TZ 3514 A | $76.35 |
| | Auto Trans | | 1.8 | E9TZ 3514 B | $113.80 |
| 17 | Tube, Shift | | 1.2 | E9TZ 7212 A | $83.14 |
| 18 | Shaft, Steering Upper | | #1.8 | E9TZ 3524 C | $90.82 |
| 19 | Shaft, Strg Inter | | #1.8 | E9TZ 3B676 B | $62.97 |
| | #R&R Complete | | | | |
| 20 | Seal | 93-9 | | E9TZ 3513 A | $25.52 |
| | | 95-9 | | F77Z 3513 CA | $35.98 |
| 21 | Ring, Retaining | | | EOTZ 3F543 A | $4.98 |
| 22 | Bearing, Column | | | EOTZ 3517 B | $19.99 |
| 23 | Sleeve, Bearing | | | D8BZ 3518 B | $5.41 |
| 24 | Retainer, Sleeve | 93-9 | | EOTZ 3D681 A | $5.70 |
| | | 95-9 | | F5TZ 3D681 A | $8.00 |
| 25 | Shield, Shaft | | | E5TZ 3F540 C | $23.70 |

COLUMN TILT

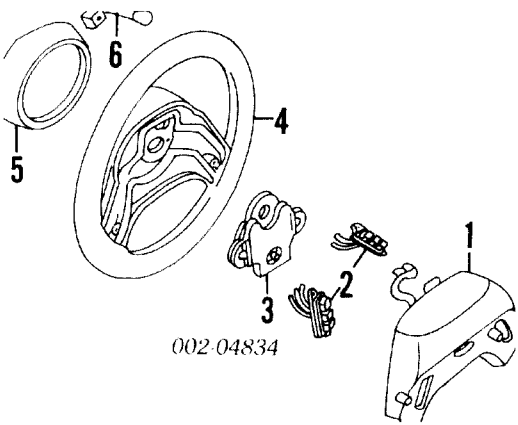


| | | |
|---|---|---|
| Refinish Shroud Collar | .3 | |
| Refinish Lock Housing Cover | | |
| Complete | .5 | |
| Upper | .3 | |

| | | | | | |
|---|---|---|---|---|---|
| Lower | | | .3 | | |
| R&I Steering Column | | | 1.4 | | |
| O/H Steering Column (Includes R&I) | | | 2.8 | | |

NOTE: All Parts in this section are included in overhaul unless noted otherwise.

| | | | | | |
|---|---|---|---|---|---|
| 1 Switch, Horn | | | | | |
| w/Cruise Control | | #.3 | | F37Z 13A805 B | $100.67 |
| w/o Cruise Control | | #.3 | | F37Z 13A805 A | $83.27 |
| Module, Air Bag-See Air Bag System Section | | | | | |
| 2 Switch, Speed Control | 93-9 | #.3 | | F37Z 9C888 BA | $153.96 |
| | 95 | #.3 | | F57Z 9C888 AG | $114.22 |
| | 96-9 | #.3 | | F67Z 9C888 BC | $176.98 |
| 3 Damper | | | | | |
| Man Trans | | #.3 | | F3TZ 3F690 A | $40.30 |
| Auto Trans | | #.3 | | F3TZ 3F690 C | $251.23 |
| #Included in R&R Steering Wheel | | | | | |
| 4 Wheel, Steering | | | | | |
| Leather | | | | | |
| 1993-94 | | | .6 | F4TZ 3600 D | $247.25 |
| 1995-97 | | | .6 | F77Z 3600 AA | $386.28 |
| Vinyl | | | | | |
| 1993-94 | | | .6 | F47Z 3600 A | $174.53 |
| 1995-97 | | | | | |
| w/Cruise Control | | | .6 | F87Z 3600 DAA | $201.88 |
| w/o Cruise Control | | | .6 | F87Z 3600 AAD | $181.45 |
| 5 Collar, Shroud (P) | | #.7 | | F2TZ 3K766 A | $33.67 |
| (P) Paint to Match | | | | | |
| #Includes R&R Steering Wheel & Tilt Handle | | | | | |
| 6 Handle, Tilt | 93-9 | | .2 | E9TZ 3F609 A | $6.47 |
| | 95-9 | | .2 | F58Z 3F609 A | $13.30 |

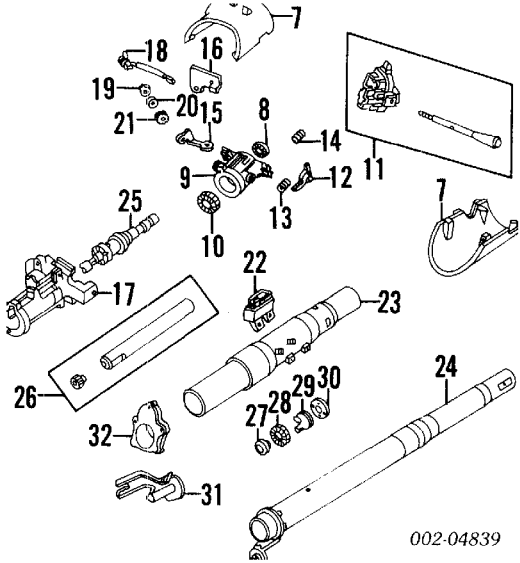


| | | | | | |
|---|---|---|---|---|---|
| 7 | Cover, Lock Housing (P) | | | | |
| | Man Trans | | | | |
| | Upper | 93-9 | #.3 | E9TZ 3530 G | $49.55 |
| | | 95-9 | #.3 | F57Z 3530 B | $19.57 |
| | Lower | 93-9 | #.3 | F2TZ 3530 D | $55.40 |
| | | 95-9 | #.3 | F57Z 3530 C | $22.58 |
| | Auto Trans | | | | |
| | Upper | 93-9 | #.3 | E9TZ 3530 C | $63.18 |
| | | 95-9 | #.3 | F57Z 3530 A | $19.57 |
| | Lower | 93-9 | #.3 | F2TZ 3530 B | $138.65 |
| | | 95-9 | #.3 | F57Z 3530 C | $22.58 |
| | (P) Paint to Match | | | | |
| | #R&R Complete | | | | |
| 8 | Bearing, Column Upper | | .8 | F3TZ 3517 A | $7.33 |
| 9 | Flange, Upper | | | | |
| | w/Cruise Control | | 1.1 | F2TZ 3511 A | $26.18 |
| | w/o Cruise Control | | 1.1 | E9TZ 3511 C | $14.17 |
| 10 | Bearing, Column Lower | | .9 | EOTZ 3517 B | $19.99 |
| 11 | Switch Assy, Turn Signal | 93-9 | .7 | F2TZ 13341 B | $335.27 |
| | | 95-9 | .7 | YL5Z 13K359 BAA | $121.94 |
| | Switch, Wiper¶ | | .7 | E3DZ 17A553 C | $51.11 |
| | ¶Included w/Turn Signal Switch Assy | | | | |
| 12 | Lever, Column Locking | | | F3TZ 3B661 A | $63.48 |
| 13 | Spring, Position Lock | | | E9TZ 3B768 A | $5.32 |
| 14 | Spring, Column Lock | | | F3TZ 3D655 A | $0.65 |
| 15 | Lever, Release | | | E9TZ 3D544 A | $21.63 |
| 16 | Cover, Actuator | | | E9TZ 3E745 A | $6.70 |

| | | | | |
|---|---|---|---|---|
| 17 | Flange, Lower | | | |
| | 1993-94 | | | |
| | w/Cruise Control | 2.0 | F2TZ 3511 B | $413.67 |
| | w/o Cruise Control | 2.0 | E9TZ 3511 D | $229.70 |
| | 1995-97 | 2.0 | F75Z 3511 AB | $88.13 |
| | Cyl & Keys, Lock¶ | # | F37Z 1022050 A | $142.87 |
| | ¶Complete Vehicle, Order by Application | | | |
| | #Not Included in O/H | | | |
| 18 | Cylinder, Ign Lock (a) | .5 | F3TZ 11582 A | $81.33 |
| | (a) Order by Application | | | |
| 19 | Retainer | | EOAZ 3C610 A | $4.78 |
| 20 | Bearing, Cylinder | | EOAZ 3E700 A | $24.03 |
| 21 | Gear, Cylinder | | D8BZ 3E717 A | $48.80 |
| 22 | Switch, Ignition | .7 | F2TZ 11572 F | $35.11 |
| 23 | Tube, Column | | | |
| | Man Trans | 2.0 | E9TZ 3514 A | $76.35 |
| | Auto Trans | 2.0 | E9TZ 3514 B | $113.80 |
| 24 | Tube, Shift | 1.2 | E9TZ 7212 A | $83.14 |
| 25 | Shaft, Steering Upper | #1.8 | E9TZ 3524 C | $90.82 |
| 26 | Shaft, Steering Inter | | | |
| | Man Strg | #1.8 | F2TZ 3B676 D | $234.05 |
| | Pwr Strg | #1.8 | F3TZ 3B676 A | $253.20 |
| | #R&R Complete | | | |
| 27 | Ring, Retaining | | EOTZ 3F543 A | $4.98 |
| 28 | Retainer, Sleeve | | EOTZ 3D681 B | $6.42 |
| 29 | Sleeve, Bearing | | D8BZ 3518 B | $5.41 |
| 30 | Bearing, Column | | EOTZ 3517 B | $19.99 |
| 31 | Shield, Shaft | | E5TZ 3F540 C | $23.70 |
| 32 | Seal | | E9TZ 3513 A | $25.52 |

# STEERING GEAR

NOTE: All Parts in this section are included in overhaul unless noted otherwise.

## MANUAL

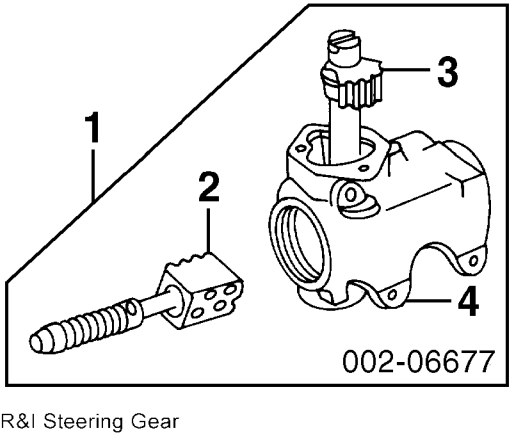


| | | | | |
|---|---|---|---|---|
| | R&I Steering Gear | 1.0 | | |
| | O/H Steering Gear (Includes R&I) | 1.9 | | |
| 1 | Gear Assy | 1.0 | E3TZ 3504 A | $892.67 |
| 2 | Shaft & Worm, Gear¶ | 1.9 | E3TZ 3524 C | $264.77 |
| 3 | Shaft, Sector¶ | 1.5 | E3TZ 3575 A | $212.15 |
| 4 | Housing¶ | 1.9 | E3TZ 3548 A | $365.17 |

¶Included w/Gear Assy

## POWER

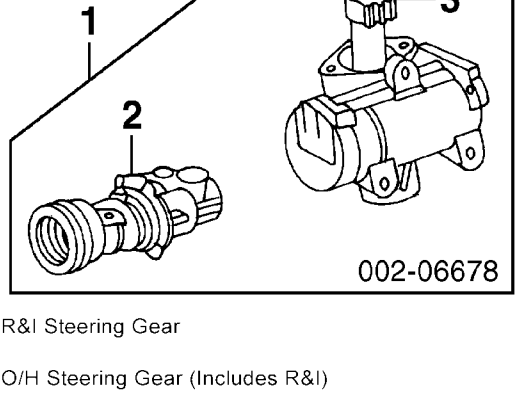


| | | | | |
|---|---|---|---|---|
| | R&I Steering Gear | 1.5 | | |
| | O/H Steering Gear (Includes R&I) | 3.0 | | |
| 1 | Gear Assy¶ | 1.5 | F8TZ 3504 ACRM | $271.29 |

¶Remanufactured Part. Contact Dealer for Core Charge & Exchange Information

| | | | | |
|---|---|---|---|---|
| 2 | Shaft & Control, Input¶ | 3.0 | F6TZ 3D517 DA | $431.32 |
| 3 | Shaft, Sector¶ | | | |
| | To 5-94 | 2.0 | F6AZ 3575 AA | $180.58 |

1997 Ford Ranger XLT Extended Cab Pickup

| | | | |
|---|---|---|---|
| From 5-94 | 2.0 | F6UZ 3575 AA | $328.98 |

¶Included w/Gear Assy

# STEERING PUMP

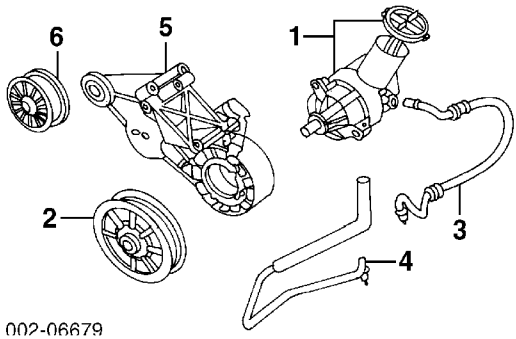


| | | | | | |
|---|---|---|---|---|---|
| 1 | Pump, Steering¶ | | | | |
| | 2.3L Eng | 93-9 | 1.3 | F1ZZ 3A674 BBRM | $148.84 |
| | | 95-9 | 1.3 | F57Z 3A674 ABRM | $114.49 |
| | 3.0L Eng | | 1.5 | F1DZ 3A674 CBRM | $114.49 |
| | 4.0L Eng | 93-9 | 1.5 | F1ZZ 3A674 BBRM | $148.84 |
| | | 95-9 | 1.5 | F57Z 3A674 CARM | |
| | ¶Remanufactured Part. Contact Dealer for Core Charge & Exchange Information | | | | |
| 2 | Pulley | | #.6 | E57Y 3A733 A | $70.80 |
| | #Included in R&R Pump Assy | | | | |
| | Belt, Drive | | | | |
| | 4 Cyl | | | | |
| | w/ A/C | | .5 | D9PZ 8620 T | $47.93 |
| | w/o A/C | | .5 | E8PZ 8620 C | $45.60 |
| | 6 Cyl-See Cooling Section | | | | |
| 3 | Hose, Pressure¶ | | | | |
| | 4 Cyl | | .6 | F4TZ 3A719 B | $86.66 |
| | 6 Cyl | | .6 | F4TZ 3A719 A | $64.74 |
| 4 | Hose, Return¶ | | .6 | FOTZ 3A713 A | $39.77 |
| | ¶Order by Application | | | | |
| 5 | Bracket, Mounting | | | | |
| | 4 Cyl | 93-9 | #1.8 | F2TZ 19E708 A | $222.30 |
| | | 95-9 | #1.8 | F5TZ 19E708 A | $173.48 |
| | 6 Cyl | | | | |
| | 3.0L Eng | 93-9 | #2.0 | F2TZ 19E708 A | $222.30 |
| | | 97 | #2.0 | F87Z 19E708 AA | $107.50 |
| | 4.0L Eng | | #2.0 | F3TZ 19E708 A | $133.00 |
| | #Includes R&R Pump Assy, Pulley & Idler Pulley | | | | |
| 6 | Pulley, Idler | | .5 | F57Z 3F671 A | $30.30 |

# ENGINE/TRANSMISSION

## Procedure 12

## 4 CYL

| | | | | |
|---|---|---|---|---|
| R&I Engine/Trans Assy | | 5.5 | | |
| Add to R&I Engine/Trans Assy | | | | |
| w/Man Trans, (2WD) | | .4 | | |
| w/4WD | | .5 | | |
| w/ A/C | | 1.0 | | |
| w/Pwr Strg | | .2 | | |
| Pulley, Crankshaft | 93-9 | #.7 | F2TZ 6312 A | $95.95 |
| | 95-9 | #.7 | F87Z 6312 AA | $99.88 |
| #w/ A/C Add .1 | | | | |
| Cover, Timing | | | | |
| Inner | 93-9 | | F3ZZ 6019 B | $51.85 |
| | 95-9 | | F57Z 6019 C | $40.03 |
| Outer | 93-9 | .9 | F3ZZ 6019 A | $54.98 |
| | 95-9 | .9 | F67Z 6019 AB | $29.32 |
| Gasket, Timing Cover | 93-9 | | F3ZZ 6020 A | $7.45 |
| | 95-9 | | F57Z 6020 A | $9.06 |
| Pan, Engine Oil | 93-9 | #6.5 | F37Z 6675 A | $259.80 |
| #Includes R&I Engine, w/Man Trans Add .3, w/4 WD Add .4 | | | | |
| Gasket, Engine Oil Pan | | | F57Z 6710 A | $20.26 |
| Pan, Trans Oil | | | | |
| 2WD | | 1.0 | F69Z 7A194 AA | $51.32 |
| 4WD | | 1.0 | F6TZ 7A194 C | |
| Gskt, Trans Oil Pan | 93-9 | | E5TZ 7A191 A | $9.58 |
| | 95-9 | | F5TZ 7A191 A | $21.98 |

## 6 CYL 3.0L ENG

| | | | | |
|---|---|---|---|---|
| R&I Engine/Trans Assy | | 6.0 | | |
| Pulley, Crankshaft | | #1.1 | F2TZ 6A312 A | $37.25 |
| #w/ A/C Add .3 | | | | |
| Cover, Timing | | #3.4 | F5DZ 6019 A | $128.30 |
| #w/ A/C Add .5 | | | | |
| Gasket, Timing Cover | 93-9 | | E6DZ 6020 A | $10.15 |
| | 95-9 | | F5DZ 6020 A | $8.45 |
| Pan, Engine Oil | 93-9 | 5.9 | F59Z 6675 A | $75.15 |
| | 95-9 | 5.9 | YL5Z 6675 AA | $75.15 |
| Seal, Eng Oil Pan Frt | | | E6DZ 6700 A | $14.94 |
| Gasket, Eng Oil Pan | | | 2U1Z 6710 AA | $56.38 |
| Seal, Eng Oil Pan Rear | | | E8DZ 6701 A | $26.89 |
| Pan, Trans Oil | | | | |
| 2WD | | 1.0 | F69Z 7A194 AA | $51.32 |

| | | | | | |
|---|---|---|---|---|---|
| 4WD | | | 1.0 | F6TZ 7A194 C | |
| Gskt, Trans Oil Pan | | | | F5TZ 7A191 A | $21.98 |
| 6 CYL 4.0L ENG | | | | | |
| R&I Engine/Trans Assy | | | 5.2 | | |
| Add to R&I Engine/Trans Assy | | | | | |
| w/ A/C | | | .5 | | |
| Pulley, Crankshaft | 93-9 | #1.1 | | XL2Z 6312 BA | $219.83 |
| | 97 | #1.1 | | XL2Z 6312 BA | $219.83 |
| #w/ A/C Add .3 | | | | | |
| Cover, Timing | | #3.4 | | FOTZ 6019 A | $248.15 |
| #w/ A/C Add .2 | | | | | |
| Gasket, Timing Cover | | | | FOTZ 6020 A | $11.84 |
| Pan, Eng Oil | | | | | |
| w/Low Oil Indicator | | #6.8 | | F4TZ 6675 B | $340.02 |
| w/o Low Oil Indicator | | #6.8 | | F5TZ 6675 B | $271.65 |
| #Includes R&I Engine, w/Auto Trans Add .3 | | | | | |
| Seal, Eng Oil Pan Frt | | | | E6TZ 6700 A | $14.00 |
| Gasket, Eng Oil Pan | 93 | | | FOTZ 6710 C | $52.45 |
| | 94-9 | | | F77Z 6710 AA | $30.82 |
| Seal, Eng Oil Pan Rear | | | | F5TZ 6701 A | $59.20 |
| Pan, Trans Oil | | | | | |
| 2WD | | | 1.0 | F69Z 7A194 AA | $51.32 |
| 4WD | | | 1.0 | F6TZ 7A194 BA | |
| Gskt, Trans Oil Pan | 93-9 | | | E5TZ 7A191 A | $9.58 |
| | 95-9 | | | F5TZ 7A191 A | $21.98 |

# ENGINE/TRANSMISSION MOUNTS

## 4 CYL

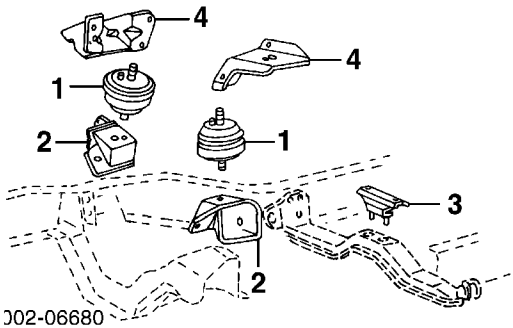


| | | | | | |
|---|---|---|---|---|---|
| 1 Mount, Eng Front | | R | #1.9 | F47Z 6038 A | $89.79 |
| | | L | #1.9 | F47Z 6038 A | $89.79 |
| #R&R Both 2.0 | | | | | |
| 2 Bracket, Eng Front | | | | | |
| 2WD | | R | #.2 | E5TZ 6028 D | $37.47 |
| | | L | #.2 | E5TZ 6029 B | $36.67 |
| 4WD | | R | #.2 | E7TZ 6028 B | $30.12 |
| | | L | #.2 | E9TZ 6029 C | $60.51 |
| #w/Front Mount Removed | | | | | |
| 3 Mount, Eng Rear | | | .6 | F5TZ 6068 A | $33.16 |
| 4 Insulator, Frt | | R | .6 | F47Z 6038 A | $89.79 |
| | | L | .6 | F47Z 6038 A | $89.79 |

## 6 CYL 3.0L ENG

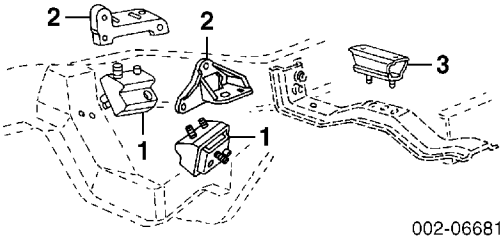


| | | | | | |
|---|---|---|---|---|---|
| 1 Mount, Eng Front | | | | | |
| 2WD | | R | #.9 | F1TZ 6038 A | $155.30 |
| | | L | #.9 | F1TZ 6038 C | $169.03 |
| 4WD | 93-9 | R | #.9 | F1TZ 6038 A | $155.30 |
| | | L | #.9 | F1TZ 6038 D | $120.68 |
| | 95-9 | R | #.9 | F1TZ 6038 D | $120.68 |
| | | L | #.9 | F1TZ 6038 D | $120.68 |
| #R&R Both 1.1 | | | | | |
| 2 Bracket, Eng Front | | | | | |
| 2WD | | R | #.2 | F1TZ 6031 B | $21.82 |
| | | L | #.2 | F1TZ 6031 B | $21.82 |
| 4WD | 93 | R | #.2 | F3TZ 6031 A | $31.88 |

| | | | | | |
|---|---|---|---|---|---|
| | | L | #.2 | F3TZ 6031 A | $31.88 |
| | 94-9 | R | #.2 | F57Z 6030 B | $19.80 |
| | | L | #.2 | F57Z 6030 B | $19.80 |
| #w/Front Mount Removed | | | | | |
| 3 Mount, Rear | | | | | |
| 2WD | 93-9 | | .7 | F5TZ 6068 A | $33.16 |
| | 95-9 | | .7 | F57Z 6068 C | $41.25 |
| 4WD | | | .7 | F5TZ 6068 B | $34.90 |

## 6 CYL 4.0L ENG

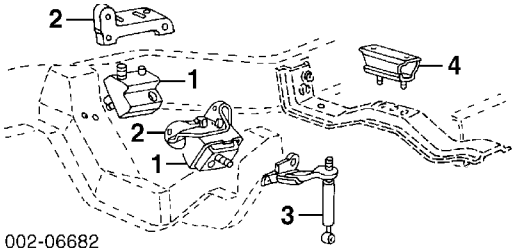

002-06682

| | | | | | |
|---|---|---|---|---|---|
| 1 Mount, Eng Front | | | | | |
| 2WD | | R | #.9 | F1TZ 6038 B | $123.76 |
| | | L | #.9 | F1TZ 6038 C | $169.03 |
| 4WD | | R | #.9 | F1TZ 6038 B | $123.76 |
| | | L | #.9 | F1TZ 6038 D | $120.68 |
| #R&R Both 1.1 | | | | | |
| 2 Bracket, Eng Front | | R | #.2 | F1TZ 6030 A | $24.17 |
| | | L | #.2 | F3TZ 6031 B | $24.75 |
| #w/Front Mount Removed | | | | | |
| 3 Damper, Engine | | L | .5 | FOTZ 6F085 A | $171.47 |
| 4 Mount, Rear | | | | | |
| 2WD | | | | | |
| 1993-94 | | | .7 | F5TZ 6068 A | $33.16 |
| 1995-97 | | | | | |
| Regular Cab | | | .7 | F5TZ 6068 A | $33.16 |
| Super Cab | | | .7 | F57Z 6068 C | $41.25 |
| 4WD | | | .7 | F5TZ 6068 B | $34.90 |

# EMISSION SYSTEM

| | | | |
|---|---|---|---|
| Valve, EGR¶ | #.7 | E6AZ 9D475 B | $119.27 |
| #w/4 Cyl Add .1 | | | |
| Canister, Vapor¶ | .5 | E2ZZ 9D653 A | $133.31 |
| Sensor, Exhaust Oxygen¶ | .8 | F39Z 9F472 C | $107.76 |

¶Order by Application

# AIR CLEANER

## 4 CYL

### 1993-94

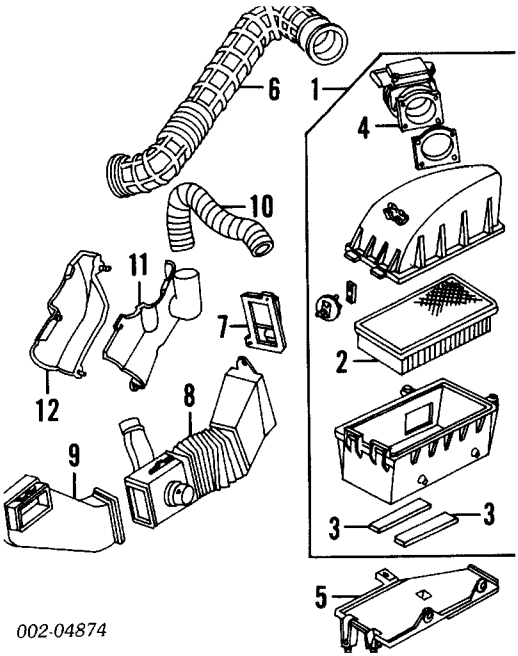


| | | | | | |
|---|---|---|---|---|---|
| | R&I Air Cleaner Assy | | .3 | | |
| 1 | Cleaner Assy, Air | | .4 | F2TZ 9600 B | $315.17 |
| 2 | Element, Cleaner¶ | | | E6AZ 9601 B | $13.20 |
| 3 | Insulator¶ | | | E5TZ 9P686 A | $27.13 |
| 4 | Sensor¶ | | .5 | F37Z 12B579 FARM | $236.53 |
| | ¶Included w/Air Cleaner Assy | | | | |
| 5 | Bracket, Air Cleaner | #.2 | | F3TZ 9647 A | $85.55 |
| | #w/Air Cleaner Assy Removed | | | | |
| 6 | Duct, Air Outlet | | .2 | F2TZ 9B659 A | $85.67 |
| 7 | Baffle | #.3 | | F37Z 9F874 C | $13.68 |
| 8 | Duct, Air Intake Frt | #.3 | | F2TZ 9A624 A | $84.98 |
| | #R&R Complete | | | | |
| 9 | Duct, Air Intake Rear | | .2 | E3TZ 9A675 A | $99.73 |
| 10 | Tube, Hot Air Intake | | .2 | E97Z 9652 A | $20.43 |
| 11 | Shroud, Air Duct Otr | #.3 | | F2TZ 9A603 B | $54.30 |
| 12 | Shroud, Air Duct Inr | #.3 | | E5TZ 9A603 F | $41.35 |
| | #R&R Complete | | | | |

## 4 CYL

### 1995-97

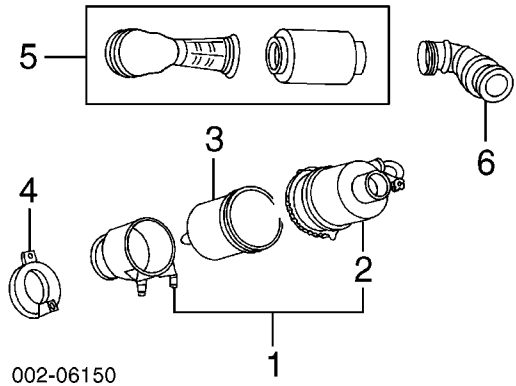


002-06150

| | | | | |
|---|---|---|---|---|
| | R&I Air Cleaner Assy | .2 | | |
| 1 | Cleaner Assy, Air | .3 | F77Z 9600 DA | $426.65 |
| 2 | Cover¶ | .3 | F37Z 9600 D | $372.25 |

¶Included w/Air Cleaner Assy

| | | | | |
|---|---|---|---|---|
| 3 | Element, Cleaner | | F57Z 9601 A | $25.02 |
| 4 | Support, Air Cleaner | | F57Z 9A627 D | $18.60 |
| 5 | Resonator, Intake | .2 | F57Z 9F763 B | $157.93 |
| 6 | Tube, Air Outlet | .2 | F58Z 9B659 A | $42.98 |

6 CYL 3.0L ENG

1993-94

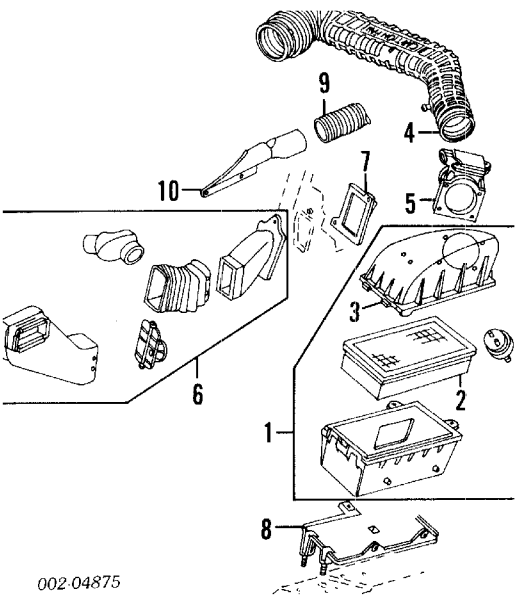


002-04875

| | | | | |
|---|---|---|---|---|
| | R&I Air Cleaner Assy | .3 | | |
| 1 | Cleaner Assy, Air | .4 | F37Z 9600 D | $372.25 |
| 2 | Element, Cleaner¶ | | E6AZ 9601 B | $13.20 |
| 3 | Cover¶ | .2 | F37Z 9600 D | $372.25 |

¶Included w/Air Cleaner Assy

| | | | | | |
|---|---|---|---|---|---|
| 4 | Tube, Outlet | | .2 | F37Z 9B659 H | $57.28 |
| 5 | Sensor | | .5 | F37Z 12B579 DARM | $166.53 |
| 6 | Tube, Air Intake | | .2 | F37Z 9A624 E | $101.68 |
| 7 | Baffle | | .3 | F37Z 9F874 C | $13.68 |
| 8 | Bracket, Air Cleaner | #.2 | | F3TZ 9647 A | $85.55 |

#w/Air Cleaner Assy Removed

| | | | | | |
|---|---|---|---|---|---|
| 9 | Tube, Hot Air Intake | | .2 | E97Z 9652 A | $20.43 |
| 10 | Shroud | | .2 | F37Z 9A603 H | $54.42 |

## 6 CYL 3.0L ENG

### 1995-97

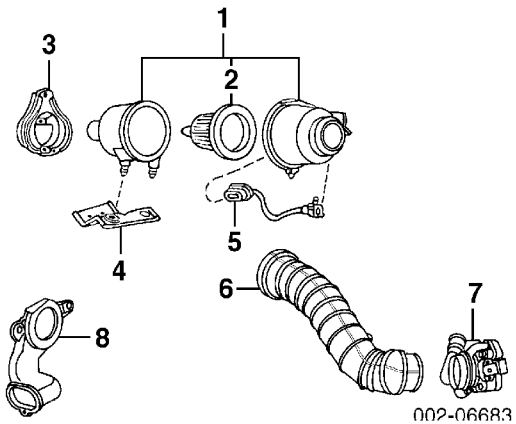


| | | | | | |
|---|---|---|---|---|---|
| | R&I Air Cleaner Assy | | .3 | | |
| 1 | Cleaner Assy, Air | | .4 | F77Z 9600 BA | $418.68 |
| 2 | Element, Cleaner¶ | | | F57Z 9601 A | $25.02 |

¶Included w/Air Cleaner Assy

| | | | | | |
|---|---|---|---|---|---|
| 3 | Brkt, Air Cleaner Rear | | | F57Z 9A627 D | $18.60 |
| 4 | Brkt, Air Cleaner Lwr | #.1 | | F57Z 9647 C | $15.00 |

#w/Air Cleaner Assy Removed

| | | | | | |
|---|---|---|---|---|---|
| 5 | Wire, Sensor¶ | | .2 | F37Z 12A690 C | $216.83 |
| | ¶Order by Application | | | | |
| 6 | Tube, Air Outlet | 95 | .2 | F67Z 9B659 BA | $75.52 |
| | | 96-9 | .2 | F67Z 9B659 BA | $75.52 |
| 7 | Sensor, Air Flow | | .5 | F37Z 12B579 DARM | $166.53 |
| 8 | Duct, Air | | .2 | F57Z 9C675 AF | $62.57 |

## 6 CYL 4.0L ENG

### 1993-94

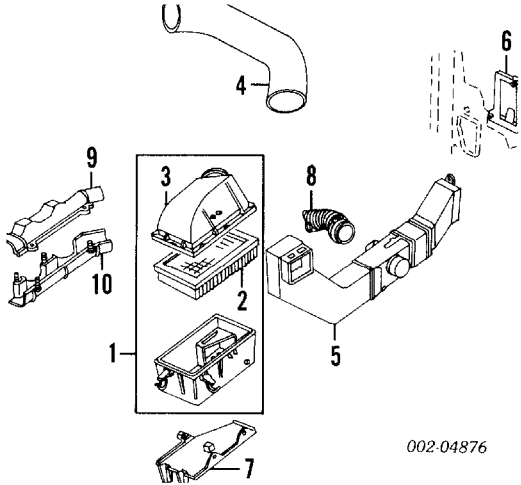


| | | | | | |
|---|---|---|---|---|---|
| | R&I Air Cleaner Assy | | .3 | | |
| 1 | Cleaner Assy, Air | | .4 | F37Z 9600 B | $421.58 |
| 2 | Element, Cleaner¶ | | | E6AZ 9601 B | $13.20 |
| 3 | Cover¶ | | .2 | F37Z 9600 B | $421.58 |
| | ¶Included w/Air Cleaner Assy | | | | |
| 4 | Tube, Outlet | | .2 | F47Z 9B659 A | $120.27 |
| 5 | Tube, Air Intake | | | | |
| | w/Angled Heater Tube | | .2 | F37Z 9A624 E | $101.68 |
| | w/Straight Heater Tube | | .2 | F37Z 9A624 F | $82.47 |
| 6 | Baffle | | .2 | F37Z 9F874 C | $13.68 |
| 7 | Bracket, Air Cleaner | #.2 | | F3TZ 9647 A | $85.55 |
| | #w/Air Cleaner Assy Removed | | | | |
| 8 | Tube, Hot Air Intake | | .2 | E97Z 9652 A | $20.43 |
| 9 | Shroud, Upper | #.3 | | F2TZ 9A603 C | $60.77 |
| 10 | Shroud, Lower | #.3 | | F2TZ 9A603 A | $56.47 |
| | #R&R Complete | | | | |

6 CYL 4.0L ENG

1995-97

1997 Ford Ranger XLT Extended Cab Pickup

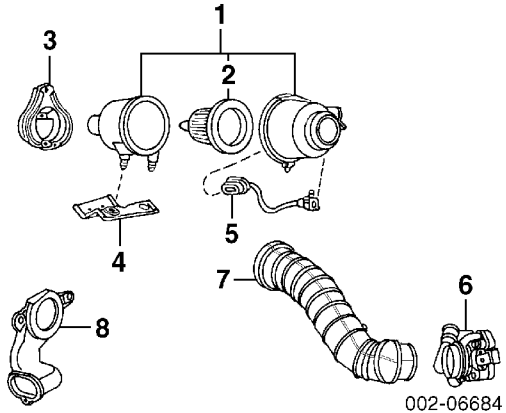


| | | | | | |
|---|---|---|---|---|---|
| | R&I Air Cleaner Assy | | .3 | | |
| 1 | Cleaner Assy, Air | | .4 | F57Z 9600 J | $459.45 |
| 2 | Element, Cleaner¶ | | | F57Z 9601 A | $25.02 |
| | ¶Included w/Air Cleaner Assy | | | | |
| 3 | Brkt, Air Cleaner Rear | | .2 | F57Z 9B698 A | $7.27 |
| 4 | Brkt, Air Cleaner Lwr | #.1 | | F57Z 9647 C | $15.00 |
| | #w/Air Cleaner Assy Removed | | | | |
| 5 | Wire, Sensor | | .2 | F37Z 12A690 C | $216.83 |
| 6 | Sensor, Air Flow | | .5 | F57Z 12B579 BARM | $286.53 |
| 7 | Tube, Air Outlet | | .2 | F57Z 9B659 F | $100.28 |
| 8 | Duct, Air | | .3 | F57Z 9C675 AF | $62.57 |

# EXHAUST

| | | | | | |
|---|---|---|---|---|---|
| Manifold, Exhaust | | | | | |
| 4 Cyl | | 93-9 | 1.5 | F37Z 9430 D | $468.03 |
| | | 95-9 | 1.5 | F57Z 9430 C | $563.43 |
| | | 97 | 1.5 | F77Z 9430 EA | $240.18 |
| 6 Cyl | | | | | |
| 3.0L Eng | | | | | |
| Right Side | | | | | |
| 1993-96 | | | | | |
| To 4-5-93 | | | #2.4 | E69Z 9430 C | $147.75 |
| From 4-5-93 | | | #2.4 | F47Z 9430 A | $106.27 |
| | 1997 | | #2.4 | F77Z 9430 HA | $158.32 |
| Left Side | | | | | |
| w/Calif Emission | | | #1.9 | F37Z 9431 M | $210.62 |
| w/o Calif Emission | | 93-9 | #1.9 | F37Z 9431 H | $138.55 |
| | | 97 | #1.9 | F77Z 9431 GA | $284.07 |
| 4.0L Eng | | | | | |
| Right Side | | 93-9 | #2.4 | F37Z 9430 D | $468.03 |
| | | 97 | #2.4 | F77Z 9430 AA | $445.67 |
| Left Side | | | | | |
| 1993-94 | | | | | |
| w/o Calif Emission | | | #1.9 | F37Z 9431 K | $127.70 |
| w/Calif Emission | | | #1.9 | F37Z 9431 L | $162.53 |
| 1995-96 | | | #1.9 | F77Z 9431 AA | $445.67 |
| | 1997 | | #1.9 | F77Z 9431 AA | $445.67 |
| #R&R Both 3.9 | | | | | |
| Converter, Catalytic | | | | | |
| 4 Cyl | | | | | |
| Man Trans | | | .8 | F1TZ 5E212 F | $831.25 |
| Auto Trans | | | .8 | F37Z 5E212 A | $775.43 |
| 6 Cyl | | | | | |
| 3.0L Eng | | | 1.3 | F37Z 5E212 B | $949.78 |
| 4.0L Eng | | | | | |
| w/o Calif Emission | | | 1.5 | F37Z 5E212 C | $1,015.97 |
| w/Calif Emission | | | 1.5 | F37Z 5E212 D | $1,029.03 |
| Muffler & Tailpipe | | | | | |
| 4 Cyl | | | | | |
| 108" WB | | | .6 | F37Z 5230 A | $183.91 |
| 114" WB | | | .6 | F37Z 5230 B | $185.93 |
| 125" WB | | | .6 | F37Z 5230 C | $252.07 |
| 6 Cyl | | | | | |
| 3.0L Eng | | | | | |
| 108" WB | | | .7 | F1TZ 5230 J | $283.00 |
| 114" WB | | | .7 | F1TZ 5230 H | $621.51 |
| 125" WB | | | .7 | F1TZ 5230 K | $286.60 |

1997 Ford Ranger XLT Extended Cab Pickup

4.0L Eng

| | | | |
|---|---|---|---|
| 108" WB | .7 | F37Z 5230 D | $298.48 |
| 114" WB | .7 | F37Z 5230 E | $545.07 |
| 125" WB | .7 | F37Z 5230 F | $343.61 |

# ELECTRICAL

## ALTERNATOR

Alternator Assy¶

| | | | | |
|---|---|---|---|---|
| 95 Amp | 93-9 | .6 | F1TZ 10346 CRM1 | $207.72 |
| | 96-9 | .6 | F6PZ 10346 LARM1 | $214.10 |
| 130 Amp | | .6 | F6UZ 10346 VARM | $179.48 |

¶Remanufactured Part. Contact Dealer for Core Charge & Exchange Information

Pulley

| | | | |
|---|---|---|---|
| 95 Amp | #.4 | FO7Z 10344 A | $20.76 |
| 130 Amp | #.4 | FOCZ 10344 AA | $18.78 |

#Included in R&R Alternator Assy

## BATTERY

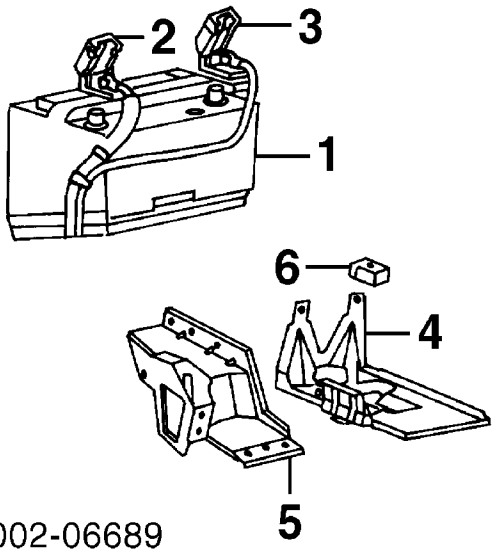


| | | | | | |
|---|---|---|---|---|---|
| 1 | Battery | | | .2 | N.A. |
| 2 | Cable, Battery Positive | | | | |
| | 4 Cyl | 93-9 | #.5 | F37Z 14300 B | $215.74 |
| | | 95-9 | #.5 | F57Z 14300 B | $229.86 |
| | | 97 | #.5 | F67Z 14300 CB | $130.42 |
| | 6 Cyl | 93 | #.5 | F37Z 14300 A | $64.38 |
| | | 94 | #.5 | F37Z 14300 C | $83.15 |
| | | 95-9 | #.5 | F57Z 14300 A | $78.78 |
| | | 97 | #.5 | F67Z 14300 BA | $130.68 |
| 3 | Cable, Battery Negative | | | | |
| | 4 Cyl | 93-9 | #.5 | F37Z 14301 B | $41.04 |
| | | 95-9 | #.5 | F57Z 14301 B | $166.18 |
| | 6 Cyl | 93-9 | #.5 | F37Z 14301 A | $101.17 |
| | | 95-9 | #.5 | F57Z 14301 A | $55.10 |

| | | | | | |
|---|---|---|---|---|---|
| | #Each Additional .3 | | | | |
| 4 | Tray, Battery | 93-9 | #.3 | F37Z 10732 A | $87.10 |
| | | 95-9 | #.3 | F57Z 10732 B | $35.22 |
| | #Includes R&R Battery | | | | |
| 5 | Reinf, Tray | 93-9 | #.5 | F47Z 16B269 A | $67.35 |
| | | 95-9 | #.5 | F67Z 16B269 AA | $68.95 |
| | #Includes R&R Battery & Battery Tray | | | | |
| 6 | Clamp, Battery | | | E7TZ 10718 B | $3.99 |
| | HORN | | | | |
| | Horn Kit | 93-9 | .5 | FOTZ 13832 C | $53.32 |
| | | 95-9 | .5 | F5TZ 13832 A | $59.95 |
| | POWERTRAIN CONTROLS | | | | |
| | Cap, Distributor | | | | |
| | 4 Cyl | | .6 | E9FZ 12106 A | $47.02 |
| | 6 Cyl | | | | |
| | 3.0L Eng | | .6 | F37Z 12106 A | $47.76 |
| | Module, Main Computer (a)¶ | | #1.0 | F47Z 12A650 DCA | $253.48 |
| | (a) Located behind Right Cowl Trim Panel | | | | |
| | #Includes R&R Cowl Trim Panel | | | | |
| | Coil, Ignition¶ | | .6 | FOTZ 12029 A | $166.64 |
| | ¶Order by Application | | | | |
| | STARTER | | | | |
| | Switch, Starter | | .5 | 1C3Z 11A152 AA | $84.24 |
| | Solenoid, Starter | | .8 | E9TZ 11450 B | $39.16 |

# WINDSHIELD

## Procedure 13

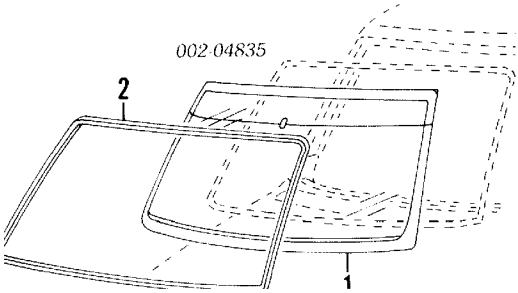


| | | | | |
|---|---|---|---|---|
| Refinish Upper Garnish Mldg | | .3 | | |
| R&I Windshield | | #2.3 | | |

#Includes Clean Up Old Adhesive as Necessary

| | | | | |
|---|---|---|---|---|
| 1 Glass, Windshield | | | | |
| Ford, (Tint) | | | | |
| 1993-94 | | #2.0 | F57Z 1003100 A | $188.60 |
| 1995-97 | | | | |
| To 5-95 | | #2.0 | F57Z 1003100 A | $188.60 |
| From 5/95 | | #2.0 | F57Z 1003100 AB | $187.65 |
| NAGS, (Green/Blue Shade) | | | | |
| w/Solar | | | | |
| w/Ford Logo | 93-9 | #2.0 | DW01337GBY | |
| | 96-9 | #2.0 | DW01357GBY | |
| w/o Ford Logo | 97 | #2.0 | DW01317GBY | $202.35 |
| w/o Solar | | | | |
| 1993-94 | | #2.0 | DW01150GBY | $187.95 |
| 1995-97 | | | | |
| To 5-95 | | #2.0 | DW01205GBY | $187.95 |
| From 5/95 | | #2.0 | DW01255GBY | $188.15 |

#Includes Clean Up Old Adhesive as Necessary

| | | | | |
|---|---|---|---|---|
| 2 Moulding, Windshield | | | F37Z 1003144 A | $117.40 |
| Moulding, Garnish | | | | |
| Upper (P) | | .2 | E9TZ 1003606 A | $23.60 |
| Side¶ | R | .2 | F37Z 1003598 A | $15.87 |
| | L | .2 | F37Z 1003599 A | $15.49 |

(P) Paint to Match

¶Blue listed, Order by Application

| | | | | |
|---|---|---|---|---|
| Mirror, Rear View | 93-9 | .2 | FOTZ 17700 A | $23.18 |

| | | | | | |
|---|---|---|---|---|---|
| | 95-9 | | .2 | F5TZ 17700 AA | $27.92 |
| Visor, Sun¶ | | | | | |
| Cloth | | R | .3 | F3TZ 7804104 AAD | $84.93 |
| | | L | .3 | F3TZ 7804105 AAD | $82.82 |
| Vinyl | | R | .3 | F37Z 1004104 AAD | $82.82 |
| | | L | .3 | F37Z 1004105 AAD | $168.52 |

¶Blue listed, Order by Application

## WIPER SYSTEM

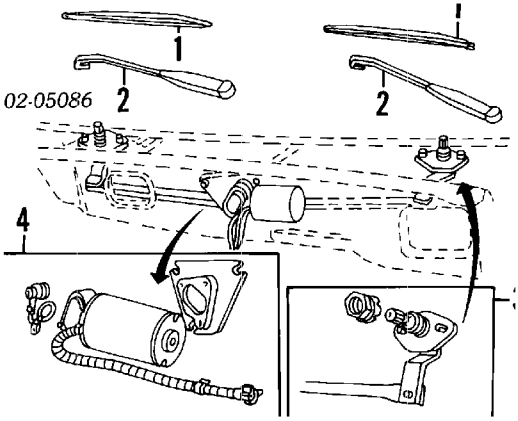


| | | | | | | |
|---|---|---|---|---|---|---|
| 1 Blade, Wiper | | R | | .1 | F6AZ 17528 BA | $8.82 |
| | | L | | .1 | F6AZ 17528 BA | $8.82 |
| 2 Arm, Wiper | 93-9 | R | #.2 | | F3TZ 17526 A | $37.00 |
| | | L | #.2 | | F3TZ 17526 A | $37.00 |
| | 95-9 | R | #.2 | | F67Z 17526 AB | $28.98 |
| | | L | #.2 | | F67Z 17526 AB | $28.98 |
| #Includes R&R Blade Assy | | | | | | |
| 3 Arm & Pivot, Wiper | 93-9 | R | #.6 | | F2TZ 17566 A | $40.98 |
| | | L | #.6 | | F2TZ 17567 A | $41.98 |
| | 95-9 | R | #.6 | | F57Z 17566 A | $28.00 |
| | | L | #.6 | | F57Z 17567 A | $35.75 |
| #R&R Both .8 | | | | | | |
| 4 Motor, Wiper | 93-9 | | | 1.0 | E9TZ 17V508 AARM | $102.16 |
| | 95-9 | | | 1.0 | F5TZ 17508 A | $143.87 |

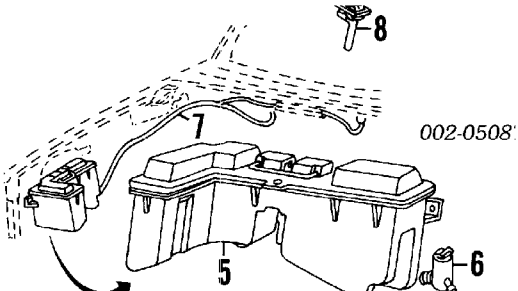

| | | | | | |
|---|---|---|---|---|---|
| 5 Tank, Coolant/Reservoir-See Cooling Section | | | | | |
| 6 Pump, Washer | 93-9 | | .5 | E5TZ 17664 B | $41.42 |
| | 97 | | .5 | F6SZ 17664 DA | $30.51 |
| 7 Hose, Washer | 93-9 | | .1 | F37Z 17A605 A | $5.37 |
| | 95-9 | | .1 | F57Z 17A605 A | $13.93 |
| 8 Nozzle, Washer | 93-9 | R | .2 | F37Z 17603 A | $7.00 |
| | | L | .2 | F37Z 17603 A | $7.00 |
| | 95-9 | R | .2 | F57Z 17603 B | $11.98 |
| | | L | .2 | F77Z 17603 BA | $9.00 |

# COWL & DASH

Procedures 14 and 28

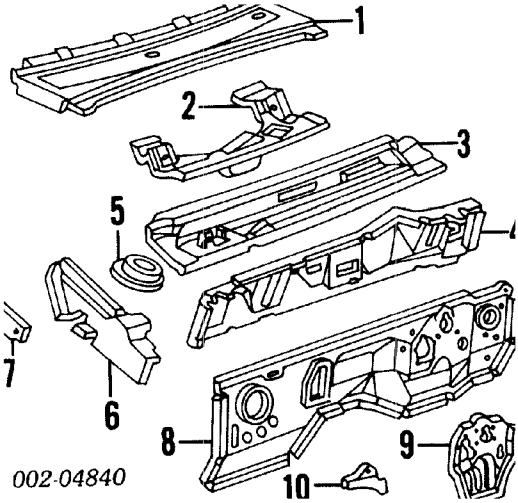


| | | | | | | |
|---|---|---|---|---|---|---|
| | Refinish Cowl Panel | | | 1.0 | | |
| | Refinish Dash Panel | | | 1.5 | | |
| 1 | Panel, Cowl | | #9.0 | | F57Z 1002012 A | $163.28 |
| | #Includes R&I Fenders & Hood & R&R Windshield, w/Antenna Add .2 | | | | | |
| 2 | Panel, Wiper Mtg | | | 1.5 | F57Z 10023A62 A | $55.17 |
| 3 | Panel, Inr Rear Cowl | 93-9 | #4.0 | | F37Z 10025A62 A | $103.13 |
| | | 95-9 | #4.0 | | 3L5Z 10025A62 AA | $242.83 |
| | #Includes R&R Wiper Mounting Panel | | | | | |
| 4 | Panel, Inr Frt Cowl | 93-9 | | 4.5 | F37Z 1002018 A | $168.12 |
| | | 95-9 | | 4.5 | F87Z 1002018 AA | $147.70 |
| 5 | Seal, Inner Panel | | | | E9TZ 7802254 A | $43.88 |
| 6 | Reinf, Cowl Vent | R | | 1.5 | F37Z 10020A16 A | $48.12 |
| | | L | | 1.5 | F57Z 10020A17 A | $63.00 |
| 7 | Vent, Air | R | | | F37Z 10014A08 A | $18.68 |
| | | L | | | F37Z 10014A09 A | $20.55 |
| 8 | Panel, Dash | 93-9 | #12.5 | | F37Z 1001610 A | $355.15 |
| | | 95-9 | #12.5 | | 6L5Z 1001610 A | $255.20 |
| | #Includes R&R Dash Reinf, w/Inner Front Cowl Panel Removed Deduct 2.0 | | | | | |
| 9 | Reinf, Dash | 93-9 | | 1.5 | F2TZ 78016A92 A | $14.75 |
| | | 95-9 | | 1.5 | F57Z 10016A92 A | $54.52 |
| 10 | Bracket, Lower | 93-9 | | .5 | E3TZ 10016N03 A | $12.54 |
| | | 95-9 | | .5 | 6L5Z 10016N03 A | $21.13 |
| | Seal, Dash | | | | 8L5Z 1002824 A | $39.22 |
| | Antenna | | | 1.1 | F1TZ 18A886 A | $28.63 |

# INSTRUMENT PANEL

Procedure 14

1993-94

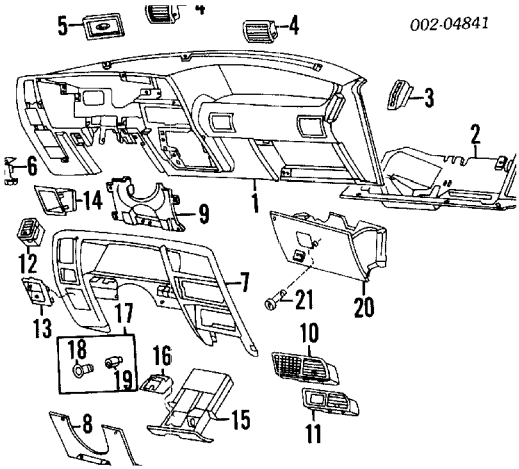


R&I Instrument Panel #5.5

#w/Auto Trans Add .3, w/ A/C Add .2

NOTE: All Parts in this section are included in R&R Instrument Panel unless noted otherwise.

| | | | | | |
|---|---|---|---|---|---|
| 1 | Panel, Instrument¶ | | #6.5 | F37Z 1004320 A | $668.30 |

¶Blue listed, Order by Application

#w/Auto Trans Add .3, w/ A/C Add .2

Module, Air Bag-See Air Bag System Section

| | | | | | |
|---|---|---|---|---|---|
| 2 | Insulator | | | E9TZ 1004398 B | $33.27 |
| 3 | Vent, Defrost¶ | R | .2 | F37Z 10046A76 A | $8.42 |
| | | L | .2 | F37Z 10046A77 A | $13.52 |

¶Blue listed, Order by Application

| | | | | | |
|---|---|---|---|---|---|
| 4 | Vent, Heater | R | .2 | E9TZ 19893 A | $27.05 |
| | | L | .2 | E9TZ 19893 A | $27.05 |
| 5 | Plate, Radio | | .1 | F37Z 1004371 A | $7.78 |
| 6 | Bracket, Light Switch | | | FOTZ 11A668 A | $87.40 |
| 7 | Panel, Cluster Trim¶ | | .6 | F37Z 10044D70 A | $92.10 |
| 8 | Cover, Strg Column¶ | | .2 | F37Z 1004459 A | $29.80 |

¶Blue listed, Order by Application

| | | | | | |
|---|---|---|---|---|---|
| 9 | Reinf, Cover | | #.2 | F2TZ 10043C00 A | $31.57 |

#w/Steering Column Cover Removed

| | | | | |
|---|---|---|---|---|
| | Vent, Heater | | | |
| 10 | 2WD | #.6 | E9TZ 19893 B | $42.77 |
| 11 | 4WD | | | |
| | w/Elect Transfer Case | #.6 | FOTZ 19893 B | $33.30 |
| | w/o Elect Transfer Case | #.6 | E9TZ 19893 B | $42.77 |
| 12 | Vent, Heater & A/C | #.6 | FOTZ 19893 C | $30.88 |
| 13 | Plate, Mounting | #.6 | E9TZ 98043B80 B | $18.03 |

#Included in R&R Cluster Trim Panel

| | | | | |
|---|---|---|---|---|
| 14 | Cover, Opening | | E9TZ 1013598 A | $17.80 |
| 15 | Ashtray¶ | .2 | F37Z 1004810 A | $140.30 |

¶Blue listed, Order by Application

| | | | | |
|---|---|---|---|---|
| 16 | Box, Ashtray | | E9TZ 1004820 A | $54.43 |
| 17 | Lighter Assy | .2 | EOVY 15055 A | $7.00 |
| 18 | Element, Lighter¶ | | D3OZ 15052 A | $9.96 |
| 19 | Socket, Lighter¶ | | D3AZ 15054 B | $5.96 |

¶Included w/Lighter Assy

| | | | | |
|---|---|---|---|---|
| 20 | Glove Box (a) | .4 | F37Z 1006024 A | $41.37 |

(a) Blue listed, Order by Application

| | | | | |
|---|---|---|---|---|
| 21 | Cyl & Keys, Lock-See Steering Wheel/Column Section | | | |
| | Radio | | | |
| | AM | 1.0 | F37Z 18806 E | $204.41 |
| | AM-FM | 1.0 | F3TZ 18806 F | $816.42 |
| | AM-FM-Cassette | | | |
| | Std Sound System | 1.0 | F3TZ 18806 G | $470.53 |
| | Premium Sound System | 1.0 | F37Z 18806 D | $484.28 |

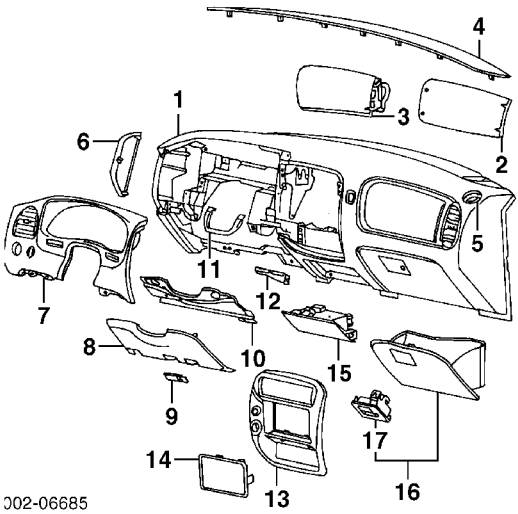


R&I Instrument Panel 5.5

NOTE: All Parts in this section are included in R&R Instrument Panel unless noted otherwise.

| | | | | | |
|---|---|---|---|---|---|
| 1 | Panel, Instrument¶ | | 7.0 | F57Z 1004320 A | $1,657.43 |
| 2 | Cover, Air Bag Opng¶ | | .2 | F57Z 10043C18 A | $59.60 |
| | ¶Blue listed, Order by Application | | | | |
| 3 | Module, Air Bag-See Air Bag System Section | | | | |
| 4 | Cover, Access Hole¶ | | .1 | F57Z 10044D82 A | $7.65 |
| 5 | Vent, Defrost¶ | R | .1 | F57Z 10046A76 A | $9.17 |
| | | L | .1 | F57Z 10046A77 A | $9.55 |
| 6 | Door, Fuse Panel¶ | | .1 | F57Z 10045D62 A | $21.27 |
| 7 | Panel, Cluster Finish¶ | | .6 | F67Z 10044D70 AAF | $141.30 |
| 8 | Cover, Strg Column¶ | | .2 | F57Z 1004459 A | $38.15 |
| 9 | Plate, Access Hole¶ | | | F57Z 10044D82 A | $7.65 |
| | ¶Blue listed, Order by Application | | | | |
| 10 | Reinf, Strg Column Cover | | .2 | F67Z 10017A28 AA | $68.82 |
| 11 | Reinf, Strg Column | | | F57Z 10044C86 A | $36.82 |
| 12 | Brace, Inst Panel | | | XL5Z 10044F48 AA | $26.40 |
| 13 | Panel, Center¶ | | .8 | F67Z 10044D70 AAD | $106.48 |
| | ¶Order by Application | | | | |
| 14 | Cover, Radio Opng | | | F87Z 1004371 AA | $13.98 |
| 15 | Ashtray¶ | | | F57Z 1004810 A | $101.16 |
| 16 | Glove Box Assy¶ | | .4 | F87Z 1006024 AAC | $193.58 |
| 17 | Latch, Glove Box (a)¶ | | | | |
| | w/Lock Cyl | | .2 | F87Z 1006072 AAC | $12.57 |

| | | | |
|---|---|---|---|
| w/o Lock Cyl | .2 | F87Z 1006072 AAC | $12.57 |

¶Blue listed, Order by Application

(a) Included w/Glove Box Assy

Radio

| | | | |
|---|---|---|---|
| AM-FM Stereo | #1.0 | F77Z 18806 AA | $457.33 |
| AM-FM Stereo-Cassette | #1.0 | F77Z 18806 BA | $444.01 |
| AM-FM-Premium Cassette | | | |
| w/CD Player | #1.0 | F57Z 18806 G | $592.49 |
| w/o CD Player | #1.0 | F57Z 18806 E | $285.87 |

#Includes R&R Center Panel

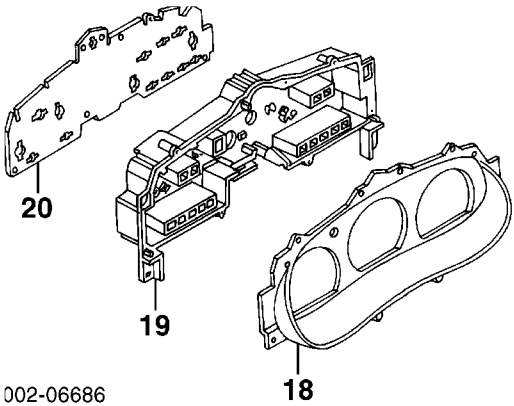


002-06686

| | | | | | |
|---|---|---|---|---|---|
| 18 | Mask, Cluster | | | | |
| | w/Tachometer | | #1.5 | XL2Z 10890 BA | $51.92 |
| | w/o Tachometer | | #1.5 | XL2Z 10890 AA | $63.40 |
| 19 | Housing, Cluster | | | | |
| | w/Tachometer | | #1.5 | F57Z 10848 B | $18.60 |
| | w/o Tachometer | | #1.5 | F87Z 10848 BA | $50.38 |
| 20 | Board, Circuit | | | | |
| | w/Tachometer | 95 | #1.5 | F57Z 10K843 B | $385.69 |
| | | 96 | #1.5 | F67Z 10K843 DB | $59.98 |
| | | 97 | #1.5 | F87Z 10K843 DA | $99.57 |
| | w/o Tachometer | 95 | #1.5 | F57Z 10K843 A | $158.70 |
| | | 96 | #1.5 | F87Z 10K843 EA | $282.93 |
| | | 97 | #1.5 | F77Z 10K843 CB | $289.62 |

#R&R Complete

# CENTER CONSOLE

Procedure 14

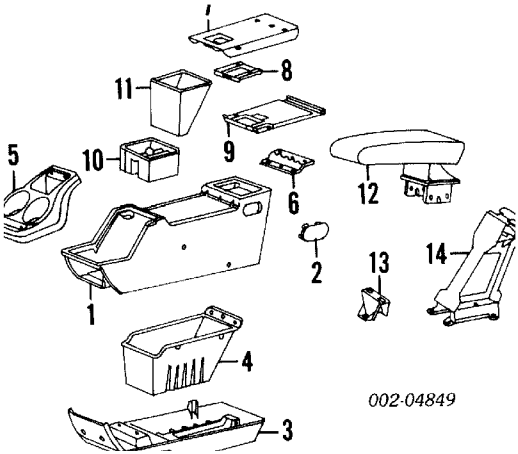


| | | | | | |
|---|---|---|---|---|---|
| | R&I Console Assy | | .5 | | |
| 1 | Panel, Console¶ | 93-9 | .8 | F5TZ 98045A36 A | $91.50 |
| | | 95-9 | .8 | F5TZ 98045A36 A | $91.50 |
| 2 | Cover, Access¶ | | | F37Z 10047A62 A | $7.35 |
| 3 | Panel, Console Bottom¶ | | | | |
| | Regular Cab | 93-9 | .6 | F37Z 10043B62 A | $83.57 |
| | | 95-9 | .6 | F57Z 10043B62 A | $57.00 |
| | Super Cab | 93-9 | .6 | F37Z 13043B62 A | $36.40 |
| | | 95-9 | .6 | F57Z 13043B62 A | $25.70 |
| | ¶Blue listed, Order by Application | | | | |
| 4 | Compartment, Glove | | | E9TZ 9806010 A | $61.00 |
| 5 | Tray, Coin | | .6 | F4TZ 78045C22 A | $147.02 |
| 6 | Hinge, Door | | | 1L2Z 7806050 BA | $18.92 |
| 7 | Door, Compartment¶ | | .2 | F3TZ 98060A78 A | $26.79 |
| | ¶Order by Application | | | | |
| 8 | Latch | | .2 | E9TZ 9806072 A | $19.12 |
| 9 | Door, Inside Compt¶ | | | F3TZ 98060A72 A | $35.73 |
| | ¶Order by Application | | | | |
| 10 | Holder, Tape | | | FOTZ 19A090 A | $81.28 |
| 11 | Container, Storage | | | E9TZ 19D504 A | $25.82 |
| 12 | Armrest¶ | | .3 | F37Z 10644A22 ABD | $187.75 |
| | ¶Mocha listed, Order by Application | | | | |
| 13 | Bracket, Console | #.1 | | 1L5Z 10045B32 AAA | $29.27 |
| 14 | Bracket, Armrest Mount | | | | |
| | Regular Cab | #.1 | | F47Z 10045C52 A | $94.37 |
| | Super Cab | #.1 | | F47Z 78045C52 A | $77.58 |

# 1997 Ford Ranger XLT Extended Cab Pickup

#w/Console Panel Removed

# ROCKER/PILLARS/FLOOR

Procedures 14, 15 and 28

## PILLARS

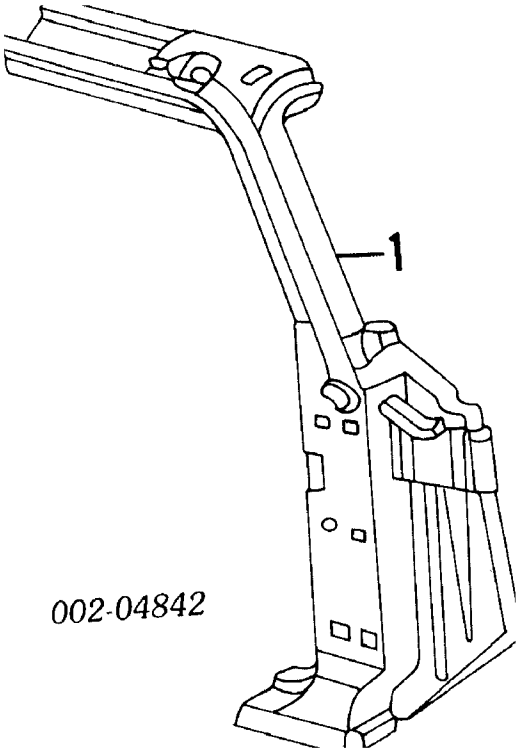


| | | | | | | |
|---|---|---|---|---|---|---|
| | Refinish Hinge Pillar | | R | 1.0 | | |
| | | | L | 1.0 | | |
| 1 | Pillar, Hinge | 93-9 | R | #9.5 | F37Z 1002500 A | $243.45 |
| | | | L | #9.5 | F37Z 1002501 A | $323.58 |
| | | 95-9 | R | #9.5 | F57Z 1002500 A | $293.65 |
| | | | L | #9.5 | F57Z 1002501 A | $344.78 |

#Includes R&R Windshield & Drilling Spotwelds on Fender Skirt for Access, w/Fender Apron Removed Deduct 1.0

| | | | | |
|---|---|---|---|---|
| Panel, Cowl Trim¶ | R | .3 | F37Z 1002344 AAD | $24.05 |
| | L | .3 | F37Z 1002345 AAD | $23.37 |

¶Mocha listed, Order by Application

## FLOOR/ROCKER

### REGULAR CAB

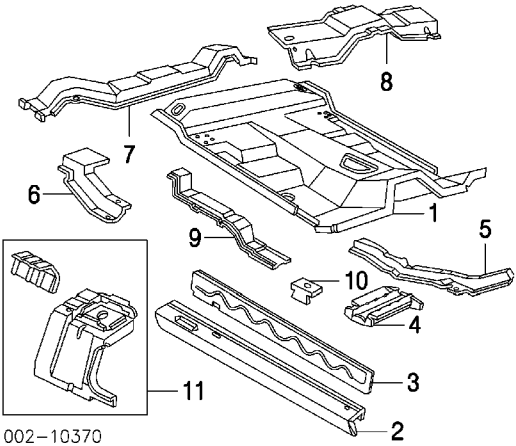


| | | | | | | |
|---|---|---|---|---|---|---|
| | Refinish Rocker Panel | R | | 1.4 | | |
| | | L | | 1.4 | | |
| 1 | Pan Assy, Floor | 93-9 | | #17.0 | F37Z 1011135 A | $195.00 |
| | | 95-9 | | #17.0 | XL5Z 1011135 AA | $187.67 |

#Includes R&R Crossmembers & Seat Belt Reinf, Deduct 3.0 for Each Rocker Panel Removed, Deduct 1.5 w/Back Panel Removed

| | | | | | | |
|---|---|---|---|---|---|---|
| 2 | Panel, Rocker | R | | #4.0 | F47Z 1010128 A | $291.05 |
| | | L | | #4.0 | F47Z 1010129 A | $265.75 |

#w/Door Removed, Time is to Section in Door Opening, w/Hinge Pillar or Corner Panel Removed Deduct 1.0

| | | | | | | |
|---|---|---|---|---|---|---|
| 3 | Reinf, Rocker Panel | R | | 2.5 | N.A. | |
| | | L | | 2.5 | N.A. | |
| | Plate, Scuff | R | | .2 | F57Z 1013208 A | $26.27 |
| | | L | | .2 | F57Z 1013208 A | $26.27 |
| 4 | Crossmember, Front | R | | 1.0 | F37Z 1010684 A | $27.53 |
| | | L | | 1.0 | F37Z 1010684 A | $27.53 |
| 5 | Crossmember, Side Front | R | | 1.5 | F87Z 1010120 AA | $60.92 |
| | | L | | 1.5 | F87Z 1010121 AA | $72.40 |
| 6 | Crossmember, Side Rear | R | | 1.5 | E3TZ 1010124 A | $52.52 |
| | | L | | 1.5 | E3TZ 1010125 A | $52.72 |
| 7 | Crossmember, Rear | | | 2.5 | E3TZ 1010624 A | $78.27 |
| 8 | Reinf, Track | | | 1.5 | F57Z 10617C50 A | $10.20 |
| 9 | Reinf, Seat Belt | R | | .5 | F47Z 1061240 A | $12.45 |
| | | L | | .5 | F47Z 1061240 A | $12.45 |
| 10 | Bracket, Seat Belt | R | | | F57Z 1061216 A | $63.88 |
| | | L | | | F57Z 1061216 A | $63.88 |
| 11 | Member, Rear Corner | R | | 1.5 | F2TZ 10107A94 A | $70.35 |
| | | L | | 1.5 | F2TZ 10107A95 A | $62.23 |

## FLOOR/ROCKER

### SUPER CAB

1997 Ford Ranger XLT Extended Cab Pickup

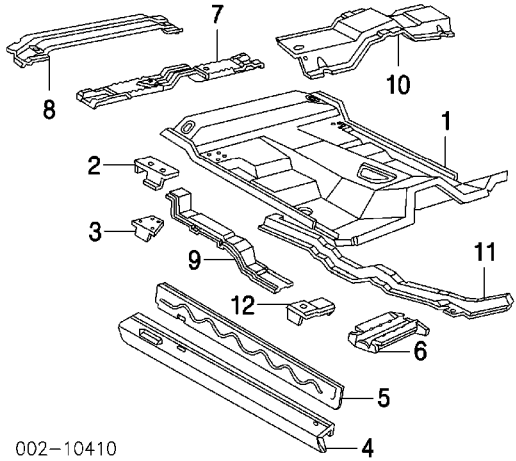


| | | | | | | |
|---|---|---|---|---|---|---|
| | Refinish Rocker Panel | R | | 1.4 | | |
| | | L | | 1.4 | | |
| 1 | Pan, Floor | 93-9 | | #18.0 | F37Z 1311135 A | $350.48 |
| | | 95-9 | | #18.0 | XL5Z 1311135 AA | $338.93 |

#Includes R&R Crossmembers & Seat Belt Reinf, Deduct 3.0 for Each Rocker Panel Removed, Deduct 1.5 w/Back Panel Removed

| | | | | | | |
|---|---|---|---|---|---|---|
| 2 | Brace, Rear Seat Rear | R | | | E7TZ 13112B78 B | $32.13 |
| | | L | | | E7TZ 13112B79 B | $28.08 |
| 3 | Brace, Rear Seat Front | R | | | E6TZ 13112B76 A | $68.50 |
| | | L | | | E6TZ 13112B76 A | $68.50 |
| 4 | Panel, Rocker | R | | #8.0 | 4L5Z 1310128 AA | $149.47 |
| | | L | | #8.0 | YL5Z 1310129 BA | $148.02 |

#w/Door Removed, w/Hinge Pillar or Corner Panel Removed Deduct 1.0

| | | | | | | |
|---|---|---|---|---|---|---|
| 5 | Reinf, Rocker Panel | R | | 2.5 | N.A. | |
| | | L | | 2.5 | N.A. | |
| | Plate, Scuff | R | | .2 | F57Z 1013208 A | $26.27 |
| | | L | | .2 | F57Z 1013208 A | $26.27 |
| 6 | Crossmember, Front | R | | 1.0 | F37Z 1010684 A | $27.53 |
| | | L | | 1.0 | F37Z 1010684 A | $27.53 |
| 7 | Crossmember, Center | | | 4.5 | F57Z 1310624 A | $90.93 |
| 8 | Crossmember, Rear | | | 2.5 | F87Z 13107A94 AA | $95.33 |
| 9 | Reinf, Seat Belt | R | | .5 | F2TZ 1361240 A | $13.42 |
| | | L | | .5 | F2TZ 1361241 A | $23.18 |
| 10 | Reinf, Track | | | 1.5 | F57Z 10617C50 A | $10.20 |
| 11 | Sidemember, Inner | R | | 2.5 | F57Z 1310110 A | $146.43 |
| | | L | | 2.5 | F57Z 1310111 A | $87.28 |
| 12 | Brace, Seat Belt | R | | | F57Z 1061216 A | $63.88 |
| | | L | | | F57Z 1061216 A | $63.88 |

# SEAT

| | | | | | | |
|---|---|---|---|---|---|---|
| R&I Seat Assy | | | | | | |
| Bench | | | | .6 | | |
| Bucket Seat, (Each) | | R | | .3 | | |
| | | L | | .3 | | |
| Jump, (Each) | | R | | .3 | | |
| | | L | | .3 | | |
| Track, Seat | | | | | | |
| Bench Seat | | R | #.7 | | F2TZ 1061704 A | $143.85 |
| | | L | #.7 | | F2TZ 1061705 A | $133.87 |
| #R&R Both .8 | | | | | | |
| Bucket Seats | | | | | | |
| Driver | 93-9 | R | #.5 | | F37Z 1061704 A | $16.67 |
| | | L | #.5 | | F37Z 1061705 A | $340.18 |
| | 95-9 | R | #.5 | | F57Z 1061704 A | $25.00 |
| | | L | #.5 | | F57Z 1061705 A | $40.22 |
| | 97 | R | #.5 | | F77Z 1061704 CC | $49.78 |
| | | L | #.5 | | F77Z 1061705 CC | $57.22 |
| Passenger | 93-9 | R | #.5 | | F37Z 1061704 BB | $425.00 |
| | | L | #.5 | | F37Z 1061705 B | $22.70 |
| | 95-9 | R | #.5 | | F57Z 1061704 B | $100.00 |
| | | L | #.5 | | F57Z 1061705 B | $52.47 |
| | 97 | R | #.5 | | F77Z 1061704 AA | $60.47 |
| | | L | #.5 | | F57Z 1061704 B | $100.00 |
| Sport Bucket | | | | | | |
| Driver | 93-9 | R | #.5 | | F3TZ 1061704 A | |
| | | L | #.5 | | F2TZ 1061705 D | $425.00 |
| | 95-9 | R | #.5 | | F57Z 1061704 D | $19.05 |
| | | L | #.5 | | F57Z 1061705 D | $39.83 |
| | 97 | R | #.5 | | F77Z 1061704 CA | $281.00 |
| | | L | #.5 | | F77Z 1061705 CA | $269.88 |
| Passenger | 93-9 | R | #.5 | | F37Z 1061704 BB | $425.00 |
| | | L | #.5 | | F2TZ 1061705 E | $16.67 |
| | 95-9 | R | #.5 | | F57Z 1061704 C | $50.00 |
| | | L | #.5 | | F57Z 1061705 C | $50.00 |
| | 97 | R | #.5 | | F77Z 1061704 BA | $73.13 |
| | | L | #.5 | | F77Z 1061705 BA | $286.72 |
| #R&R Both .6 | | | | | | |
| Adjuster, Seat | | | | | | |
| Regular Cab | | | | | | |
| Bench Seats | 93-9 | R | | 1.0 | F57Z 1062648 A | $116.95 |
| | | L | | 1.0 | F2TZ 1062649 A | $41.76 |
| | 95-9 | R | | 1.0 | F57Z 1062648 A | $116.95 |
| | | L | | 1.0 | F57Z 1062649 A | $172.15 |
| Bucket Seats | | R | | 1.0 | F87Z 7862648 AA | $153.97 |

1997 Ford Ranger XLT Extended Cab Pickup

| | | | | |
|---|---|---|---|---|
| | L | 1.0 | F77Z 7862649 AA | $91.85 |
| Super Cab | R | 1.0 | F87Z 9862648 BA | $132.00 |
| | L | 1.0 | F77Z 9862649 BA | $72.88 |

# SEAT BELTS

## BENCH SEAT

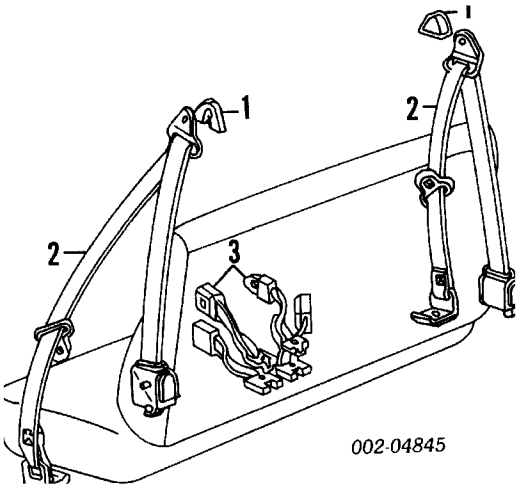


1 Cover, Anchor

| | | | |
|---|---|---|---|
| 1993-94 | | | |
| Blue | R | F3TZ 1060262 B | $5.63 |
| | L | F3TZ 1060262 B | $5.63 |
| Gray | R | F37Z 1060262 C | $17.18 |
| | L | F37Z 1060262 C | $17.18 |
| Mocha | R | F2TZ 1060262 A | $19.32 |
| | L | F2TZ 1060262 A | $19.32 |
| Red | R | F3TZ 1060262 A | $5.82 |
| | L | F3TZ 1060262 A | $5.82 |
| 1995-96 | | | |
| Blue | R | F58Z 1660262 B | $5.27 |
| | L | F58Z 1660262 B | $5.27 |
| Graphite | R | F57Z 1060262 D | $8.15 |
| | L | F57Z 1060262 D | $8.15 |
| Green | R | F58Z 1660262 C | $6.60 |
| | L | F58Z 1660262 C | $6.60 |
| Saddle | R | F57Z 1060262 A | $7.08 |
| | L | F57Z 1060262 A | $7.08 |
| 1997 | | | |
| To 5-5-97 | | | |
| Blue | R | F58Z 1660262 B | $5.27 |
| | L | F58Z 1660262 B | $5.27 |
| Graphite | R | F57Z 1060262 D | $8.15 |
| | L | F57Z 1060262 D | $8.15 |
| Green | R | F58Z 1660262 C | $6.60 |
| | L | F58Z 1660262 C | $6.60 |
| Tan | R | F77Z 1060262 BBB | $7.15 |
| | L | F77Z 1060262 BBB | $7.15 |

1997 Ford Ranger XLT Extended Cab Pickup

| | | | | | |
|---|---|---|---|---|---|
| From 5-6-97 | | | | | |
| Blue | R | | | F65Z 1560262 AAR | $10.08 |
| | L | | | F65Z 1560262 AAR | $10.08 |
| Graphite, Green, Tan | R | | | F65Z 1560262 AAD | $7.10 |
| | L | | | F65Z 1560262 AAD | $7.10 |
| 2 Belt, Outer Seat | | | | | |
| 1993-94 | | | | | |
| w/Trim Cover | R | | .3 | F37Z 10611B08 H | $164.50 |
| | L | | .3 | F37Z 10611B09 H | $369.80 |
| w/o Trim Cover | R | #1.0 | | F37Z 10611B08 D | $367.03 |
| | L | #1.0 | | F37Z 10611B09 D | $511.88 |
| 1995 | | | | | |
| Regular Cab | | | | | |
| Blue | R | #1.0 | | F57Z 10611B08 B | $1,124.88 |
| | L | #1.0 | | F57Z 10611B09 F | $569.45 |
| Graphite | R | #1.0 | | F57Z 10611B08 D | $354.35 |
| | L | #1.0 | | F57Z 10611B09 H | $314.43 |
| Green | R | #1.0 | | F57Z 10611B08 C | $184.30 |
| | L | #1.0 | | F57Z 10611B09 G | $269.87 |
| Saddle | R | #1.0 | | F57Z 10611B08 A | $511.83 |
| | L | #1.0 | | F57Z 10611B09 E | $798.78 |
| Super Cab | | | | | |
| Blue | R | #1.0 | | F57Z 10611B08 F | $126.63 |
| | L | #1.0 | | F57Z 10611B09 F | $569.45 |
| Graphite | R | #1.0 | | F57Z 10611B08 H | $872.43 |
| | L | #1.0 | | F57Z 10611B09 H | $314.43 |
| Green | R | #1.0 | | F57Z 10611B08 G | $126.63 |
| | L | #1.0 | | F57Z 10611B09 G | $269.87 |
| Saddle | R | #1.0 | | F57Z 10611B08 E | $920.95 |
| | L | #1.0 | | F57Z 10611B09 E | $798.78 |
| 1996 | | | | | |
| Regular Cab | | | | | |
| Blue | R | #1.0 | | F67Z 10611B08 B | $132.03 |
| | L | #1.0 | | F57Z 10611B09 F | $569.45 |
| Graphite | R | #1.0 | | F67Z 10611B08 D | $487.53 |
| | L | #1.0 | | F57Z 10611B09 H | $314.43 |
| Green | R | #1.0 | | F67Z 10611B08 C | $132.03 |
| | L | #1.0 | | F57Z 10611B09 G | $269.87 |
| Saddle | R | #1.0 | | F67Z 10611B08 A | $198.43 |
| | L | #1.0 | | F57Z 10611B09 E | $798.78 |
| Super Cab | | | | | |
| Blue | R | #1.0 | | F67Z 10611B08 F | $141.38 |
| | L | #1.0 | | F57Z 10611B09 F | $569.45 |
| Graphite | R | #1.0 | | F67Z 10611B08 H | $365.15 |
| | L | #1.0 | | F57Z 10611B09 H | $314.43 |
| Green | R | #1.0 | | F67Z 10611B08 G | $96.53 |

1997 Ford Ranger XLT Extended Cab Pickup

| | | | | |
|---|---|---|---|---|
| | L | #1.0 | F57Z 10611B09 G | $269.87 |
| Saddle | R | #1.0 | F67Z 10611B08 E | $748.48 |
| | L | #1.0 | F57Z 10611B09 E | $798.78 |

1997

To 5-5-97

Regular Cab

| | | | | |
|---|---|---|---|---|
| Blue | R | #1.0 | F67Z 10611B08 B | $132.03 |
| | L | #1.0 | F57Z 10611B09 F | $569.45 |
| Graphite | R | #1.0 | F67Z 10611B08 D | $487.53 |
| | L | #1.0 | F57Z 10611B09 H | $314.43 |
| Green | R | #1.0 | F67Z 10611B08 C | $132.03 |
| | L | #1.0 | F57Z 10611B09 G | $269.87 |
| Tan | R | #1.0 | F77Z 10611B08 DDD | $278.93 |
| | L | #1.0 | F77Z 10611B09 CCC | $300.67 |

Super Cab

| | | | | |
|---|---|---|---|---|
| Blue | R | #1.0 | F67Z 10611B08 F | $141.38 |
| | L | #1.0 | F57Z 10611B09 F | $569.45 |
| Graphite | R | #1.0 | F67Z 10611B08 H | $365.15 |
| | L | #1.0 | F57Z 10611B09 H | $314.43 |
| Green | R | #1.0 | F67Z 10611B08 G | $96.53 |
| | L | #1.0 | F57Z 10611B09 G | $269.87 |
| Tan | R | #1.0 | F77Z 10611B08 HHH | $469.45 |
| | L | #1.0 | F77Z 10611B09 CCC | $300.67 |

From 5-6-97

| | | | | |
|---|---|---|---|---|
| Regular Cab | R | #1.0 | F77Z 10611B08 DDD | $278.93 |
| | L | #1.0 | F77Z 10611B09 CCC | $300.67 |
| Super Cab | R | #1.0 | F77Z 10611B08 HHH | $469.45 |
| | L | #1.0 | F77Z 10611B09 CCC | $300.67 |

#Includes R&R Rear Corner Trim Panel

3 Belt/Buckle, Center Seat

1993-94

Regular Cab

Full Bench Seat

| | | | | |
|---|---|---|---|---|
| Blue, Gray, Red | R | #.2 | F37Z 1061202 J | $97.40 |
| | L | #.2 | F37Z 1061203 J | $113.77 |
| Mocha | R | #.2 | F37Z 1061202 J | $97.40 |
| | L | #.2 | F2TZ 1061203 D | $167.82 |

Split Bench Seat

| | | | | |
|---|---|---|---|---|
| Blue, Gray, Red | R | #.2 | F37Z 1061202 C | $245.43 |
| | L | #.2 | F37Z 1061203 C | $142.62 |
| Mocha | R | #.2 | F2TZ 1061202 M | $39.85 |
| | L | #.2 | F2TZ 1061203 M | $102.65 |
| Super Cab | R | #.2 | F3TZ 7861202 C | $137.63 |
| | L | #.2 | F3TZ 7861203 C | $93.25 |

1997 Ford Ranger XLT Extended Cab Pickup

| | | | | |
|---|---|---|---|---|
| 1995-96 | | | | |
| Regular Cab | | | | |
| Full Bench Seat | R | #.2 | F57Z 1061202 M | $170.08 |
| | L | #.2 | F57Z 1061203 D | $120.83 |
| Split Bench Seat | R | #.2 | F57Z 1061202 H | $97.10 |
| | L | #.2 | F57Z 1061203 H | $116.90 |
| Super Cab | R | #.2 | F57Z 7861202 D | $94.38 |
| | L | #.2 | F57Z 7861203 D | $73.67 |
| 1997 | | | | |
| Regular Cab | | | | |
| Full Bench Seat | | | | |
| Blue, Graphite, Green | R | #.2 | F57Z 1061202 M | $170.08 |
| | L | #.2 | F57Z 1061203 D | $120.83 |
| Tan | R | #.2 | F77Z 1061202 CAA | $166.28 |
| | L | #.2 | F57Z 1061203 D | $120.83 |
| Split Bench Seat | | | | |
| Blue, Graphite, Green | R | #.2 | F57Z 1061202 H | $97.10 |
| | L | #.2 | F57Z 1061203 H | $116.90 |
| Tan | R | #.2 | F77Z 1061202 BAA | $299.12 |
| | L | #.2 | F77Z 1061203 BAA | $101.27 |
| Super Cab | R | #.2 | F57Z 7861202 D | $94.38 |
| | L | #.2 | F57Z 7861203 D | $73.67 |

#R&R One or All

## BUCKET SEAT

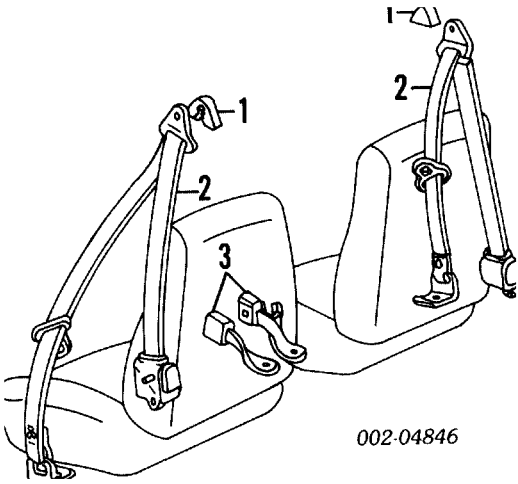


| | | | |
|---|---|---|---|
| Add to R&R Seat Belt | | | |
| w/Jump Seat | R | .3 | |
| | L | .3 | |
| 1 Cover, Anchor | | | |
| 1993-94 | | | |
| Blue | R | F3TZ 1060262 B | $5.63 |
| | L | F3TZ 1060262 B | $5.63 |

| | | | | | |
|---|---|---|---|---|---|
| Gray | R | | | F37Z 1060262 C | $17.18 |
| | L | | | F37Z 1060262 C | $17.18 |
| Mocha | R | | | F2TZ 1060262 A | $19.32 |
| | L | | | F2TZ 1060262 A | $19.32 |
| Red | R | | | F3TZ 1060262 A | $5.82 |
| | L | | | F3TZ 1060262 A | $5.82 |
| 1995-96 | | | | | |
| Blue | R | | | F58Z 1660262 B | $5.27 |
| | L | | | F58Z 1660262 B | $5.27 |
| Graphite | R | | | F57Z 1060262 D | $8.15 |
| | L | | | F57Z 1060262 D | $8.15 |
| Green | R | | | F58Z 1660262 C | $6.60 |
| | L | | | F58Z 1660262 C | $6.60 |
| Saddle | R | | | F57Z 1060262 A | $7.08 |
| | L | | | F57Z 1060262 A | $7.08 |
| 1997 | | | | | |
| To 5-5-97 | | | | | |
| Blue | R | | | F58Z 1660262 B | $5.27 |
| | L | | | F58Z 1660262 B | $5.27 |
| Graphite | R | | | F57Z 1060262 D | $8.15 |
| | L | | | F57Z 1060262 D | $8.15 |
| Green | R | | | F58Z 1660262 C | $6.60 |
| | L | | | F58Z 1660262 C | $6.60 |
| Tan | R | | | F77Z 1060262 BBB | $7.15 |
| | L | | | F77Z 1060262 BBB | $7.15 |
| From 5-6-97 | | | | | |
| Blue | R | | | F65Z 1560262 AAR | $10.08 |
| | L | | | F65Z 1560262 AAR | $10.08 |
| Graphite, Green, Tan | R | | | F65Z 1560262 AAD | $7.10 |
| | L | | | F65Z 1560262 AAD | $7.10 |
| 2 Belt, Outer Seat | | | | | |
| 1993-94 | | | | | |
| w/Trim Cover | R | | .3 | F37Z 10611B08 H | $164.50 |
| | L | | .3 | F37Z 10611B09 H | $369.80 |
| w/o Trim Cover | R | #1.0 | | F37Z 10611B08 D | $367.03 |
| | L | #1.0 | | F37Z 10611B09 D | $511.88 |
| 1995 | | | | | |
| Regular Cab | | | | | |
| Blue | R | #1.0 | | F57Z 10611B08 B | $1,124.88 |
| | L | #1.0 | | F57Z 10611B09 F | $569.45 |
| Graphite | R | #1.0 | | F57Z 10611B08 D | $354.35 |
| | L | #1.0 | | F57Z 10611B09 H | $314.43 |
| Green | R | #1.0 | | F57Z 10611B08 C | $184.30 |
| | L | #1.0 | | F57Z 10611B09 G | $269.87 |
| Saddle | R | #1.0 | | F57Z 10611B08 A | $511.83 |
| | L | #1.0 | | F57Z 10611B09 E | $798.78 |

1997 Ford Ranger XLT Extended Cab Pickup

| | | | | |
|---|---|---|---|---|
| Super Cab | | | | |
| Blue | R | #1.0 | F57Z 10611B08 F | $126.63 |
| | L | #1.0 | F57Z 10611B09 F | $569.45 |
| Graphite | R | #1.0 | F57Z 10611B08 H | $872.43 |
| | L | #1.0 | F57Z 10611B09 H | $314.43 |
| Green | R | #1.0 | F57Z 10611B08 G | $126.63 |
| | L | #1.0 | F57Z 10611B09 G | $269.87 |
| Saddle | R | #1.0 | F57Z 10611B08 E | $920.95 |
| | L | #1.0 | F57Z 10611B09 E | $798.78 |
| 1996 | | | | |
| Regular Cab | | | | |
| Blue | R | #1.0 | F67Z 10611B08 B | $132.03 |
| | L | #1.0 | F57Z 10611B09 F | $569.45 |
| Graphite | R | #1.0 | F67Z 10611B08 D | $487.53 |
| | L | #1.0 | F57Z 10611B09 H | $314.43 |
| Green | R | #1.0 | F67Z 10611B08 C | $132.03 |
| | L | #1.0 | F57Z 10611B09 G | $269.87 |
| Saddle | R | #1.0 | F67Z 10611B08 A | $198.43 |
| | L | #1.0 | F57Z 10611B09 E | $798.78 |
| Super Cab | | | | |
| Blue | R | #1.0 | F67Z 10611B08 F | $141.38 |
| | L | #1.0 | F57Z 10611B09 F | $569.45 |
| Graphite | R | #1.0 | F67Z 10611B08 H | $365.15 |
| | L | #1.0 | F57Z 10611B09 H | $314.43 |
| Green | R | #1.0 | F67Z 10611B08 G | $96.53 |
| | L | #1.0 | F57Z 10611B09 G | $269.87 |
| Saddle | R | #1.0 | F67Z 10611B08 E | $748.48 |
| | L | #1.0 | F57Z 10611B09 E | $798.78 |
| 1997 | | | | |
| To 5-5-97 | | | | |
| Regular Cab | | | | |
| Blue | R | #1.0 | F67Z 10611B08 B | $132.03 |
| | L | #1.0 | F57Z 10611B09 F | $569.45 |
| Graphite | R | #1.0 | F67Z 10611B08 D | $487.53 |
| | L | #1.0 | F57Z 10611B09 H | $314.43 |
| Green | R | #1.0 | F67Z 10611B08 C | $132.03 |
| | L | #1.0 | F57Z 10611B09 G | $269.87 |
| Tan | R | #1.0 | F77Z 10611B08 DDD | $278.93 |
| | L | #1.0 | F77Z 10611B09 CCC | $300.67 |
| Super Cab | | | | |
| Blue | R | #1.0 | F67Z 10611B08 F | $141.38 |
| | L | #1.0 | F57Z 10611B09 F | $569.45 |
| Graphite | R | #1.0 | F67Z 10611B08 H | $365.15 |
| | L | #1.0 | F57Z 10611B09 H | $314.43 |
| Green | R | #1.0 | F67Z 10611B08 G | $96.53 |
| | L | #1.0 | F57Z 10611B09 G | $269.87 |

1997 Ford Ranger XLT Extended Cab Pickup

| | | | | |
|---|---|---|---|---|
| Tan | R | #1.0 | F77Z 10611B08 HHH | $469.45 |
| | L | #1.0 | F77Z 10611B09 CCC | $300.67 |
| From 5-6-97 | | | | |
| Regular Cab | R | #1.0 | F77Z 10611B08 DDD | $278.93 |
| | L | #1.0 | F77Z 10611B09 CCC | $300.67 |
| Super Cab | R | #1.0 | F77Z 10611B08 HHH | $469.45 |
| | L | #1.0 | F77Z 10611B09 CCC | $300.67 |

#Includes R&R Corner Trim Panel

3 Buckle, Seat Belt

| | | | | |
|---|---|---|---|---|
| 1993-94 | | | | |
| Regular Cab | | | | |
| Blue, Gray, Red | R | .2 | F37Z 1061202 F | $45.10 |
| | L | .2 | F37Z 1061203 F | $177.07 |
| Mocha | R | .2 | F2TZ 1061202 H | $180.68 |
| | L | .2 | F2TZ 1061203 H | $153.13 |
| Super Cab | R | .2 | F3TZ 7861202 C | $137.63 |
| | L | .2 | F3TZ 7861203 C | $93.25 |
| 1995-96 | | | | |
| Regular Cab | | | | |
| Blue | R | .2 | F57Z 1061202 D | $282.82 |
| | L | .2 | F57Z 1061203 K | $242.57 |
| Graphite | R | .2 | F57Z 1061202 D | $282.82 |
| | L | .2 | F57Z 1061203 M | $224.33 |
| Green | R | .2 | F57Z 1061202 D | $282.82 |
| | L | .2 | F57Z 1061203 L | $46.92 |
| Saddle | R | .2 | F57Z 1061202 A | $355.07 |
| | L | .2 | F57Z 1061203 M | $224.33 |
| Super Cab | R | .2 | F57Z 7861202 D | $94.38 |
| | L | .2 | F57Z 7861203 D | $73.67 |
| 1997 | | | | |
| Regular Cab | | | | |
| Blue | R | .2 | F57Z 1061202 D | $282.82 |
| | L | .2 | F57Z 1061203 K | $242.57 |
| Graphite | R | .2 | F57Z 1061202 D | $282.82 |
| | L | .2 | F57Z 1061203 M | $224.33 |
| Green | R | .2 | F57Z 1061202 D | $282.82 |
| | L | .2 | F57Z 1061203 L | $46.92 |
| Tan | R | .2 | F77Z 1061202 BAA | $299.12 |
| | L | .2 | F77Z 1061203 BAA | $101.27 |
| Super Cab | R | .2 | F57Z 7861202 D | $94.38 |
| | L | .2 | F57Z 7861203 D | $73.67 |

## REAR JUMP SEAT

Belt Kit, Seat

1993

1997 Ford Ranger XLT Extended Cab Pickup

| | | | | | | |
|---|---|---|---|---|---|---|
| To 2-15-93 | | R | .3 | F37Z 13613B84 | D | $105.23 |
| | | L | .3 | F37Z 13613B84 | D | $105.23 |
| From 2-16-93 | | R | .3 | F37Z 13613B84 | H | $98.57 |
| | | L | .3 | F37Z 13613B84 | H | $98.57 |
| | 1994 | R | .3 | F37Z 13613B84 | H | $98.57 |
| | | L | .3 | F37Z 13613B84 | H | $98.57 |
| 1995-97 | | | | | | |
| Blue | | R | .3 | F57Z 13613B84 | B | $98.57 |
| | | L | .3 | F57Z 13613B84 | B | $98.57 |
| Graphite | | R | .3 | F57Z 13613B84 | D | $340.40 |
| | | L | .3 | F57Z 13613B84 | D | $340.40 |
| Green | | R | .3 | F57Z 13613B84 | C | $98.57 |
| | | L | .3 | F57Z 13613B84 | C | $98.57 |
| Saddle | | R | .3 | F57Z 13613B84 | A | $98.57 |
| | | L | .3 | F57Z 13613B84 | A | $98.57 |

# FRONT DOOR

Procedures 16 and 28

SHEET METAL

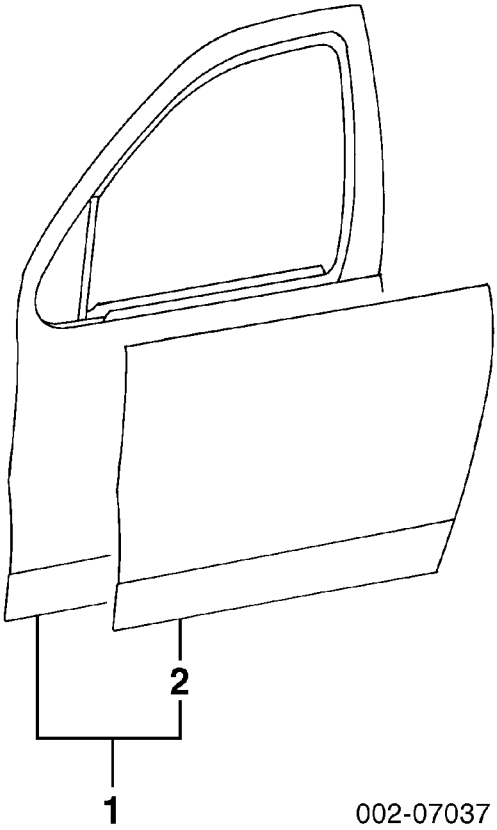


002-07037

| | | |
|---|---|---|
| Refinish Door Outside | R | 2.5 |
| | L | 2.5 |
| Add for Jambs & Interior | R | 1.0 |
| | L | 1.0 |
| Add for Jambs | R | .5 |
| | L | .5 |
| R&I Door Assy | R | .5 |
| | L | .5 |
| Add to R&I Door Assy | | |
| w/Pwr Windows | R | .4 |
| | L | .4 |
| Add to R&R Door Shell | | |
| w/Pwr Windows | R | .3 |
| | L | .3 |
| Add to R&R Door Repair Panel | | |
| w/Wiring Harness | R | .2 |

| | | | | | |
|---|---|---|---|---|---|
| | L | | .2 | | |
| 1 Shell Assy, Door | | | | | |
| 1993-94 | R | #4.3 | | F47Z 1020124 B | $583.72 |
| | L | #4.3 | | F47Z 1020125 B | $614.63 |
| 1995-97 | | | | | |
| Right¶ | | #4.3 | | 5L5Z 1020124 A | $608.68 |
| Left | | #4.3 | | F67Z 1020125 AA | $525.80 |

¶Additional Parts &/or Dealer Contact Required

#Includes R&R Mirror

| | | | | | |
|---|---|---|---|---|---|
| 2 Panel, Door Repair (a) | R | #5.8 | | 7L5Z 1020200 A | $405.72 |
| | L | #5.8 | | 7L5Z 1020201 A | $405.72 |

(a) Included w/Door Shell Assy

#Includes R&R Mirror & Door Glass

## EXTERIOR TRIM

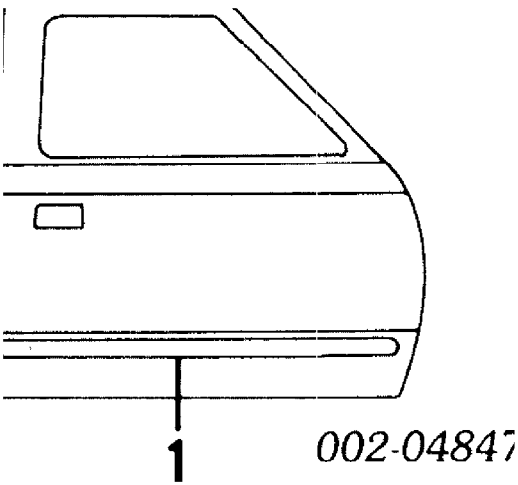


| | | | | | |
|---|---|---|---|---|---|
| R&I Rear View Mirror | | | | | |
| Manual | R | #.5 | | | |
| | L | #.5 | | | |
| Power | R | #.6 | | | |
| | L | #.6 | | | |

#Includes R&I Trim Panel

| | | | | | |
|---|---|---|---|---|---|
| 1 Moulding, Side¶ | | | | | |
| Styleside | R | | .2 | XL5Z 1020878 BPTM | $86.42 |
| | L | | .2 | XL5Z 1020878 BPTM | $86.42 |
| Flareside | R | | .2 | XL5Z 1020878 APTM | $98.37 |
| | L | | .2 | XL5Z 1020878 APTM | $98.37 |
| Mirror, Rear View¶ | | | | | |
| Styleside | | | | | |

| | | | | |
|---|---|---|---|---|
| Manual | R | #.2 | F87Z 17682 SAA | $108.00 |
| | L | #.2 | F87Z 17683 SAB | $108.00 |
| Power | R | #.3 | F47Z 17682 EA | $336.27 |
| | L | #.3 | F57Z 17683 B | $177.69 |
| Flareside | | | | |
| Power | R | #.3 | F47Z 17682 EA | $336.27 |
| | L | #.3 | F47Z 17683 EB | $364.53 |

¶Order by Application
#w/Trim Panel Removed

Tape, Stripe-See Stripe Tape Section

## INTERIOR TRIM

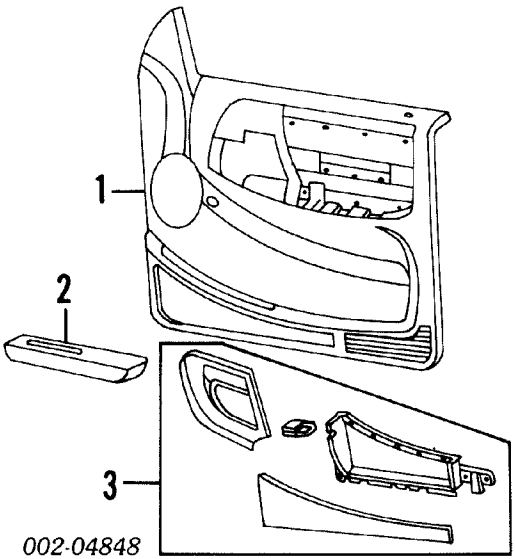


| | | | | |
|---|---|---|---|---|
| R&I Trim Panel | R | .3 | | |
| | L | .3 | | |

NOTE: All Parts in this section are included in R&R Trim Panel unless noted otherwise.

| | | | | |
|---|---|---|---|---|
| 1 Panel, Trim¶ | | | | |
| Vinyl | R | .5 | F37Z 1023942 AAK | $220.93 |
| | L | .5 | F37Z 1023943 AAK | $220.93 |
| Cloth/Vinyl | | | | |
| w/Power Equip | R | .5 | F37Z 1023942 CAK | $330.41 |
| | L | .5 | F37Z 1023943 CAK | $330.41 |
| w/o Power Equip | R | .5 | F37Z 1023942 BAK | $330.41 |
| | L | .5 | F37Z 1023943 BAK | $321.68 |
| 2 Armrest¶ | | | | |
| Vinyl | R | .2 | F37Z 1024100 AAK | $44.58 |
| | L | .2 | F37Z 1024101 AAK | $44.58 |
| Cloth/Vinyl | R | .2 | F37Z 1024100 BAC | $49.25 |

| | | | | | |
|---|---|---|---|---|---|
| | L | | .2 | F37Z 1024101 BAC | $52.47 |

¶Blue listed, Order by Application

| | | | | | |
|---|---|---|---|---|---|
| 3 Panel, Finish | | | | | |
| Vinyl | R | | .2 | F37Z 1023712 A | $30.17 |
| | L | | .2 | F37Z 1023713 A | $22.95 |
| Cloth/Vinyl | | | | | |
| w/Power Equip | R | | .2 | F37Z 1023712 C | $22.38 |
| | L | | .2 | F37Z 1023713 D | $22.38 |
| w/o Power Equip | | | | | |
| w/Pwr Mirror | R | | .2 | F37Z 1023712 C | $22.38 |
| | L | | .2 | F37Z 1023712 C | $22.38 |
| w/o Pwr Mirror | R | | .2 | F37Z 1023712 B | $22.38 |
| | L | | .2 | F37Z 1023712 B | $22.38 |
| Speaker, Radio¶ | | | | | |
| Standard | R | #.2 | | E9SZ 18808 A | $26.26 |
| | L | #.2 | | E9SZ 18808 A | $26.26 |
| Premium | R | #.2 | | E9DZ 18808 C | $60.81 |
| | L | #.2 | | E9DZ 18808 C | $60.81 |

¶Order by Application

#w/Trim Panel Removed, Not Included in R&R Trim Panel

## HARDWARE

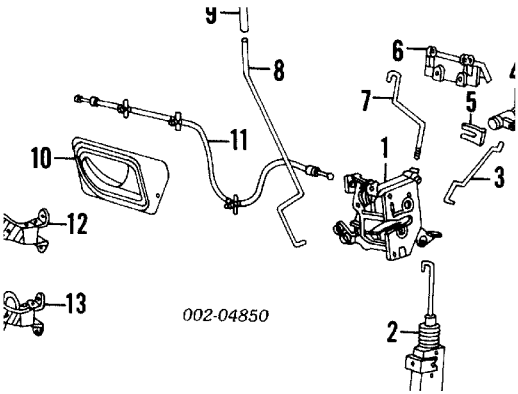


| | | | |
|---|---|---|---|
| Refinish Upper Hinge | R | | .2 |
| | L | | .2 |
| Refinish Lower Hinge | R | | .2 |
| | L | | .2 |

R&I Outside Handle & Lock Cylinder

| | | |
|---|---|---|
| Right | | #.8 |
| Left | | #.8 |

#Includes R&I Trim Panel

| | | | | | | |
|---|---|---|---|---|---|---|
| | R&R Lock Cylinder | | R | #.2 | | |
| | | | L | #.2 | | |
| | #w/Trim Panel Removed | | | | | |
| 1 | Latch | 93-9 | R | #.3 | F37Z 1021812 A | $31.97 |
| | | | L | #.3 | F37Z 1021813 A | $35.60 |
| | | 96-9 | R | #.3 | F67Z 1021812 AB | $39.82 |
| | | | L | .3 | F67Z 1021813 AB | $37.35 |
| 2 | Actuator, Power Latch | | R | #.2 | F77Z 10218A42 A | $79.40 |
| | | | L | #.2 | F77Z 10218A42 A | $79.40 |
| | #w/Trim Panel Removed | | | | | |
| 3 | Rod, Latch/Cyl | | R | | F37Z 1022134 A | $6.97 |
| | | | L | | F37Z 1022134 A | $6.97 |
| 4 | Cyl & Keys, Lock-See Steering Wheel/Column Section | | | | | |
| 5 | Retainer, Lock Cyl | | R | | E9TZ 1022023 B | $23.04 |
| | | | L | | E9TZ 1022023 B | $23.04 |
| 6 | Handle, Outside | | R | #.5 | F37Z 1022404 A | $19.37 |
| | | | L | #.5 | F37Z 1022405 A | $19.37 |
| | #w/Trim Panel Removed | | | | | |
| 7 | Rod, Handle to Latch | | R | | F37Z 1022152 A | $8.72 |
| | | | L | | F37Z 1022152 A | $8.72 |
| 8 | Rod, Latch Control | | R | | F37Z 1021852 A | $11.58 |
| | | | L | | F37Z 1021853 A | $11.58 |
| 9 | Knob, Control Rod | | R | | D9ZZ 6621850 B | $7.05 |
| | | | L | | D9ZZ 6621850 B | $7.05 |
| 10 | Handle, Inside | | R | #.2 | F37Z 1021818 A | $63.57 |
| | | | L | #.2 | F37Z 1021819 A | $83.03 |
| | #w/Trim Panel Removed | | | | | |
| 11 | Cable, Inside Handle | | R | | F37Z 10221A00 A | $35.72 |
| | | | L | | F37Z 10221A00 A | $35.72 |
| 12 | Hinge, Upper | | R | #.8 | 6L5Z 1022800 AA | $32.68 |
| | | | L | #1.3 | 6L5Z 1022800 AA | $32.68 |
| | #w/Door & Fender Removed, Includes R&R Cowl Trim Panel, Left Side also Includes Loosen Fuse Panel | | | | | |
| 13 | Hinge, Lower | | R | #.6 | F8AZ 5422810 AA | $30.00 |
| | | | L | #.6 | F8AZ 5422810 AA | $30.00 |
| | #w/Door & Fender Removed, Includes R&R Cowl Trim Panel | | | | | |
| | W/Strip on Body | | R | #.3 | 8L5Z 1020708 A | $86.93 |
| | | | L | #.3 | 8L5Z 1020708 A | $86.93 |
| | #w/Necessary Trim Removed | | | | | |
| | W/Strip, On Door | | R | .3 | E8TZ 1020518 A | $40.10 |

| | | | | |
|---|---|---|---|---|
| | L | .3 | E8TZ 1020518 A | $40.10 |

## GLASS & PARTS

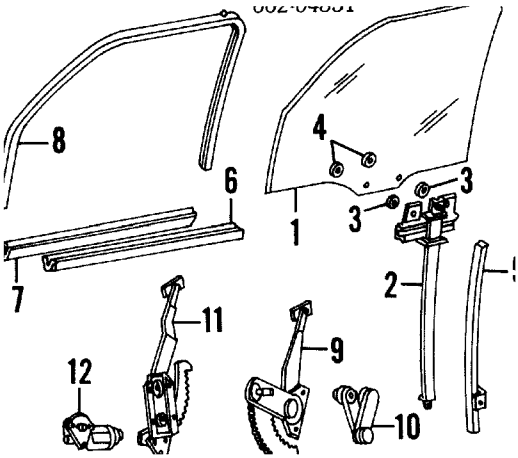


| | | | | |
|---|---|---|---|---|
| R&I Outer Belt W/Strip | R | #.7 | | |
| | L | #.7 | | |
| R&I Upper Run | R | #.8 | | |
| | L | #.8 | | |
| #Includes R&I Trim Panel & R&R Mirror | | | | |
| 1 Glass, Door | | | | |
| Ford, (Tint) | R | #1.0 | F37Z 1021410 A | $131.58 |
| | L | #1.0 | F37Z 1021411 A | $131.87 |
| NAGS, (Green) | R | #1.0 | DD08237GTN | $166.45 |
| | L | #1.0 | DD08238GTN | $166.45 |
| #Includes R&I Trim Panel | | | | |
| 2 Bracket, Glass | R | #.2 | XL5Z 1023288 AA | $40.75 |
| | L | #.2 | XL5Z 1023288 AA | $40.75 |
| #w/Door Glass Removed | | | | |
| Retainer, Glass | | | | |
| 3 Inner, (2/Side) | R | | D9AZ 54234A44 AA | $2.28 |
| | L | | D9AZ 54234A44 AA | $2.28 |
| 4 Outer, (2/Side) | R | | D9AZ 54234A46 AA | $2.24 |
| | L | | D9AZ 54234A46 AA | $2.24 |
| 5 Retainer, Run | R | #.2 | 8L5Z 10222A00 A | $41.28 |
| | L | #.2 | 8L5Z 10222A00 A | $41.28 |
| #w/Door Glass Removed | | | | |
| 6 W/Strip, Belt Inner | R | | 8L5Z 1021456 A | $35.02 |
| | L | | 8L5Z 1021456 A | $35.02 |
| 7 W/Strip, Belt Outer | R | #.8 | F37Z 1021452 A | $36.05 |
| | L | #.8 | F37Z 1021453 A | $36.05 |
| 8 Run, Upper | R | #.9 | 8L5Z 1021546 A | $113.00 |
| | L | #.9 | 8L5Z 1021547 A | $113.00 |

#Includes R&I Trim Panel & R&R Mirror

| | | | | | | |
|---|---|---|---|---|---|---|
| 9 | Regulator, Manual | | R | #.7 | 7L5Z 1023200 A | $68.95 |
| | | | L | #.7 | 7L5Z 1023201 A | $82.74 |

#Includes R&I Trim Panel, w/Glass Removed Deduct .5

| | | | | | | |
|---|---|---|---|---|---|---|
| 10 | Handle, Regulator | | R | .1 | F37Z 1023342 A | $11.22 |
| | | | L | .1 | F37Z 1023342 A | $11.22 |
| 11 | Regulator, Power | | R | #.8 | 3L5Z 1023208 AA | $88.52 |
| | | | L | #.8 | 3L5Z 1023209 AA | $86.92 |

#Includes R&I Trim Panel, w/Glass Removed Deduct .5

| | | | | | | |
|---|---|---|---|---|---|---|
| 12 | Motor, Regulator | 93-9 | R | #.7 | F37Z 10233V94 ARM | $145.32 |
| | | | L | #.7 | F37Z 10233V95 ARM | $145.32 |
| | | 96-9 | R | #.7 | 3L5Z 1523394 BA | $134.34 |
| | | | L | #.7 | 8L5Z 7823395 A | $110.62 |

#Includes R&I Trim Panel, Included in R&R Power Regulator

# CAB

Procedures 8, 14, 15, 17, 18 and 28

## SHEET METAL

### REGULAR CAB

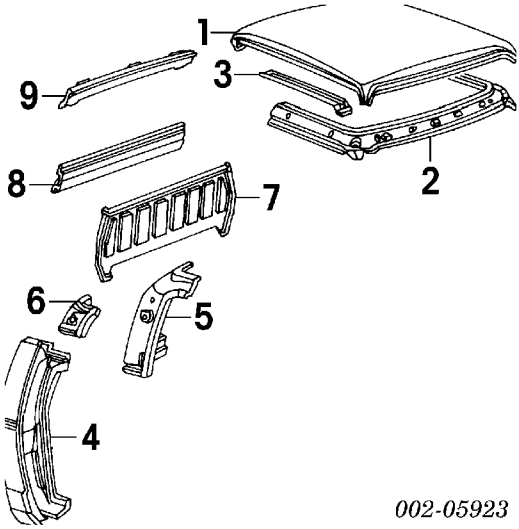


*002-05923*

| | | | | | |
|---|---|---|---|---|---|
| Refinish Roof Outside | | | 2.4 | | |
| Add to Edge Panel | | | .8 | | |
| Refinish Corner Panel | | R | 2.0 | | |
| | | L | 2.0 | | |
| Add for Pillar | | R | .5 | | |
| | | L | .5 | | |
| Refinish Inside Panel | | R | .5 | | |
| | | L | .5 | | |
| Refinish Back Panel Complete | | | 2.0 | | |
| Refinish Header Panel | | | .8 | | |
| 1 Panel, Roof Outer | | | #12.0 | F37Z 1050202 A | $581.02 |
| #Includes R&R Headliner & Stop/Cargo Lamp Assy | | | | | |
| 2 Panel, Header | | | #3.5 | F37Z 1003418 A | $55.30 |
| 3 Reinf, Ctr | | | #.5 | F87Z 1050244 AA | $80.52 |
| #w/Outer Panel Removed | | | | | |
| 4 Panel, Corner | | R | #8.5 | F37Z 10280A58 A | $356.47 |
| | | L | #8.5 | F37Z 10280A59 A | $383.15 |
| #w/Bed Assy Removed, Includes R&R Headliner, Corner Trim Panel, Window Lower Mldg, Back Glass, Lower Back Trim Panel, Striker Plate, Reinf & Striker | | | | | |
| 5 Panel, Inside | 93-9 | R | #2.5 | F37Z 1040476 A | $33.22 |

| | | | | | |
|---|---|---|---|---|---|
| | | L | #2.5 | F37Z 1040477 A | $30.33 |
| | 95-9 | R | #2.5 | F57Z 1040476 A | $85.32 |
| | | L | #2.5 | F57Z 1040477 A | $52.68 |

#w/Corner Panel Removed, Includes R&R Seat Belt Reinforcement

| | | | | | | |
|---|---|---|---|---|---|---|
| 6 | Reinf, Seat Belt | 93-9 | R | .7 | F37Z 10602A04 A | $109.67 |
| | | | L | .7 | F37Z 10602A05 A | $12.98 |
| | | 95-9 | R | .7 | F57Z 10278D12 AAK | $51.87 |
| | | | L | .7 | F57Z 10278D13 AAK | $51.87 |
| | Striker, Latch | | R | .2 | 8F9Z 5422008 A | $20.53 |
| | | | L | .2 | 8F9Z 5422008 A | $20.53 |
| | Plate, Striker | | R | | E25Y 5422024 A | $6.58 |
| | | | L | | E25Y 5422024 A | $6.58 |
| | Reinf, Striker Plate | | R | | F37Z 1022078 A | $51.82 |
| | | | L | | F37Z 1022079 A | $54.47 |
| 7 | Panel, Back | | | | | |
| | w/Interior Trim | | | #8.4 | F37Z 1040300 A | $94.20 |

#w/Bed Assy Removed, Includes R&R Corner Trim Panels, Lower Back Trim Panel, Window Lower Mldg & Back Glass, Deduct 3.2 for Each Corner Panel Removed

| | | | | | |
|---|---|---|---|---|---|
| | w/o Interior Trim | | | #7.0 | F37Z 1040300 A | $94.20 |

#w/Bed Assy Removed, Includes R&R Back Glass, Deduct 2.5 for Each Corner Panel Removed

| | | | | | |
|---|---|---|---|---|---|
| 8 | Panel, Back Inner | | | #1.5 | F87Z 1040492 AA | $65.62 |
| 9 | Panel, Back Inner Upr | | | #1.0 | F37Z 10403E52 A | $34.52 |

#Included in R&R Back Panel

## INTERIOR TRIM

### REGULAR CAB

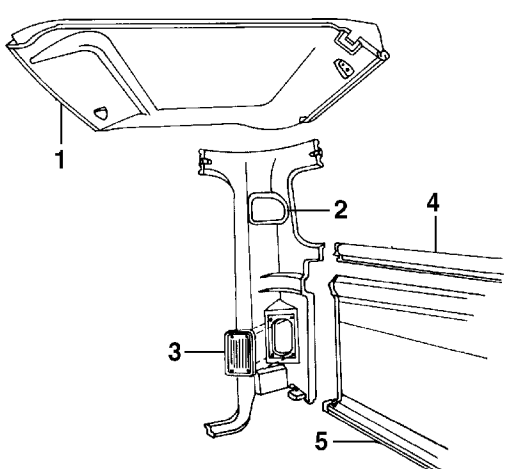


002-09360

| | | | | | | |
|---|---|---|---|---|---|---|
| Refinish Speaker Grille | | R | | .2 | | |
| | | L | | .2 | | |
| Refinish Back Window Lwr Mldg | | | | .3 | | |
| 1 Headliner¶ | | | | | | |
| w/Assist Handle | | | | 1.2 | F37Z 1051944 BAK | $482.08 |
| w/o Assist Handle | | | | 1.0 | F77Z 1051944 AAB | $445.07 |
| ¶Blue listed, Order by Application | | | | | | |
| 2 Panel, Rear Corner¶ | 93-9 | R | | .7 | F37Z 10278D12 AAK | $46.15 |
| | | L | | .7 | F37Z 10278D13 AAK | $45.02 |
| | 95-9 | R | | .7 | F57Z 10278D12 AAK | $51.87 |
| | | L | | .7 | F57Z 10278D13 AAK | $51.87 |
| ¶Blue listed, Order by Application | | | | | | |
| Speaker, Radio (a) | | R | #.2 | | E9DZ 18808 C | $60.81 |
| | | L | #.2 | | E9DZ 18808 C | $60.81 |
| (a) Order by Application | | | | | | |
| 3 Grille, Speaker (P) | | R | #.2 | | F2TZ 18978 U | $12.71 |
| | | L | #.2 | | F2TZ 18978 U | $12.71 |
| #R&R One Side Complete | | | | | | |
| 4 Mldg, Back Window Lwr (P) | | | | .2 | E3TZ 1042456 A | $32.28 |
| (P) Paint to Match | | | | | | |
| 5 Panel, Lwr Back¶ | 93-9 | | #.5 | | F37Z 1040374 AAK | $177.86 |
| | 95-9 | | #.5 | | F57Z 1040374 AAK | $92.52 |
| ¶Blue listed, Order by Application | | | | | | |

#Includes R&I Back Window Lower Mldg

## SHEET METAL

### SUPER CAB

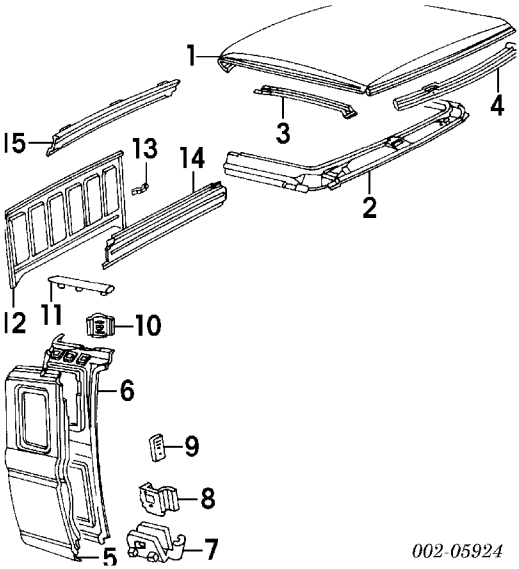


002-05924

| | | | | | |
|---|---|---|---|---|---|
| Refinish Roof Outside | | 3.0 | | | |
| Add to Edge Panel | | .8 | | | |
| Refinish Corner Panel | R | 2.4 | | | |
| | L | 2.4 | | | |
| Add for Pillar | R | .5 | | | |
| | L | .5 | | | |
| Refinish Inner Corner Panel | R | 1.0 | | | |
| | L | 1.0 | | | |
| Refinish Outside Mldg | R | .3 | | | |
| | L | .3 | | | |
| Refinish Back Panel Complete | | 2.0 | | | |
| Refinish Header Panel | | .8 | | | |
| 1 Panel, Roof Outer | | #13.4 | 5L5Z 1350202 AA | $612.35 | |
| #Includes R&R Headliner, Stop/Cargo Lamp Assy & Outside Mouldings | | | | | |
| 2 Panel, Header | | #3.5 | F37Z 1303418 A | $62.47 | |
| 3 Reinf, Roof Ctr | | #.5 | F37Z 1350244 A | $51.77 | |
| 4 Reinf, Roof Rear | | #1.0 | F37Z 1350222 A | $56.07 | |
| 5 Panel, Corner | R | #10.0 | F67Z 13280A58 BA | $388.13 | |
| | L | #10.0 | F37Z 13280A59 A | $437.80 | |
| #w/Bed Assy Removed, Includes R&R Headliner, Corner Trim Panels, Back Window Mldg, Back Glass, Lower Back Trim Panel, Quarter Glass, Striker Plate & Reinf, w/Jump Seat Add .3 | | | | | |
| 6 Panel, Inr Corner | | | | | |
| 1993-94 | R | #3.5 | F37Z 1340252 A | $165.70 | |
| | L | #3.5 | F37Z 1340253 A | $111.68 | |

1997 Ford Ranger XLT Extended Cab Pickup

| | | | | | |
|---|---|---|---|---|---|
| | To 4-95 | R | #3.5 | F87Z 1340252 AA | $152.73 |
| | | L | #3.5 | F87Z 1340253 AA | $126.60 |
| | From 4-95 | R | #3.5 | F67Z 1340252 AB | $117.93 |
| | | L | #3.5 | F87Z 1340252 AA | $152.73 |
| | 1996-97 | R | #3.5 | F67Z 1340252 AB | $117.93 |
| | | L | #3.5 | F87Z 1340252 AA | $152.73 |

#w/Corner Panel Removed, Includes R&R Seat Belt Support & Shoulder Belt Reinforcement

| | | | | | |
|---|---|---|---|---|---|
| 7 | Tray, Jack | | .5 | F37Z 17W077 A | $101.10 |
| 8 | Support, Seat Belt | R | | F37Z 1060292 A | $9.30 |
| | | L | | F37Z 1060293 A | $9.02 |
| | Plate, Striker | R | | E25Y 5422024 A | $6.58 |
| | | L | | E25Y 5422024 A | $6.58 |
| 9 | Reinf, Striker Plate | R | | F37Z 1022078 A | $51.82 |
| | | L | | F37Z 1022079 A | $54.47 |
| 10 | Reinf, Shoulder Belt | R | | F37Z 13602A04 A | $15.58 |
| | | L | | F37Z 13602A05 A | $5.83 |
| 11 | Mldg, Outside | R | #1.0 | F37Z 13517A72 A | $40.47 |
| | | L | #1.0 | F37Z 13517A73 A | $40.47 |

#Includes R&R Corner Trim Panel, Included in R&R Roof Outer Panel & Corner Panel, w/Jump Seat Add .3

| | | | | | |
|---|---|---|---|---|---|
| 12 | Panel, Back | | #8.8 | F37Z 1340300 A | $113.60 |

#w/Bed Assy Removed, Includes R&R Corner Trim Panels, Back Window Mldg, Lower Back Panel & Back Glass, w/Jump Seats Add .6, Deduct 3.4 for Each Corner Panel Removed

| | | | | | |
|---|---|---|---|---|---|
| 13 | Bracket, Panel | | | E6TZ 13403D50 A | $5.70 |
| 14 | Panel, Inr Back | | #1.5 | F37Z 1340492 A | $26.45 |
| 15 | Panel, Inr Upper | | #1.0 | F37Z 13403E52 A | $54.77 |

#Included in R&R Back Panel

## INTERIOR TRIM

### SUPER CAB

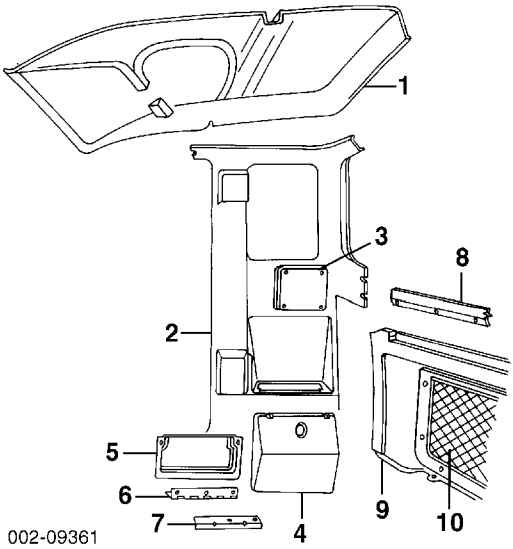


| | | | | | | |
|---|---|---|---|---|---|---|
| Refinish Speaker Grille | | R | | .2 | | |
| | | L | | .2 | | |
| Refinish Back Window Mldg | | | | .3 | | |
| Add to R&R Corner Trim Panel | | | | | | |
| w/Jump Seat | | R | | .3 | | |
| | | L | | .3 | | |
| 1 Headliner¶ | | | | | | |
| 1993-94 | | | | 2.0 | F37Z 1351944 AAK | $418.10 |
| 1995-96 | | | | 2.0 | F57Z 1351944 AAK | $482.08 |
| | 1997 | | | | | |
| To 3-97 | | | | 2.0 | F57Z 1351944 AAK | $482.08 |
| From 3-97 | | | | 2.0 | F77Z 1351944 AAE | $459.03 |
| ¶Blue listed, Order by Application | | | | | | |
| 2 Panel, Corner Trim¶ | | | | | | |
| w/Rear Seat | 93-9 | R | #.8 | | F37Z 1331012 BAK | $115.52 |
| | | L | #.8 | | F37Z 1331013 BAK | $115.52 |
| | 95-9 | R | #.8 | | F57Z 1331012 BAK | $106.97 |
| | | L | #.8 | | F57Z 1331013 BAK | $84.93 |
| #Includes R&I Jump Seat | | | | | | |
| w/o Rear Seat | 93-9 | R | | .8 | F37Z 1331012 AAK | $228.35 |
| | | L | | .8 | F37Z 1331013 AAK | $228.35 |
| | 95-9 | R | | .8 | F57Z 1331012 AAK | $198.48 |
| | | L | | .8 | F57Z 1331013 AAK | $211.27 |
| | 97 | R | | .8 | F67Z 1331012 AAC | $215.27 |
| | | L | | .8 | F67Z 1331013 AAC | $188.17 |
| Speaker, Radio¶ | | R | #.2 | | E9DZ 18808 C | $60.81 |

| | | | | | |
|---|---|---|---|---|---|
| | | L | #.2 | E9DZ 18808 C | $60.81 |
| | ¶Order by Application | | | | |
| 3 | Grille, Speaker (P) | R | #.2 | E6TZ 18978 E | $20.31 |
| | | L | #.2 | E6TZ 18978 F | $25.53 |
| | (P) Paint to Match | | | | |
| | #R&R One Side Complete | | | | |
| 4 | Door, Compartment¶ | R | #.2 | F2TZ 1331560 A | $142.33 |
| | | L | #.2 | F2TZ 1331560 A | $142.33 |
| | ¶Blue listed, Order by Application | | | | |
| 5 | Compartment, Storage | R | #.2 | E6TZ 1331500 A | $21.97 |
| | | L | #.2 | E6TZ 1331500 A | $21.97 |
| 6 | Hinge, Door | R | #.2 | E6TZ 1331518 A | $25.35 |
| | | L | #.2 | E6TZ 1331518 A | $25.35 |
| | #R&R Complete | | | | |
| 7 | Retainer, Hinge | R | | E6TZ 13313A38 A | $16.00 |
| | | L | | E6TZ 13313A38 A | $16.00 |
| | Latch | R | | E4DZ 5406072 B | $21.55 |
| | | L | | E4DZ 5406072 B | $21.55 |
| | Catch | R | | E63Z 5406064 A | $99.70 |
| | | L | | E63Z 5406064 A | $99.70 |
| | Cylinder, Ign Lock | | | | |
| | Cylinder, Ign Lock-See Steering Wheel/Column Section | | | | |
| | Retainer, Cyl | R | | E6TZ 1306088 A | $35.94 |
| | | L | | E6TZ 1306088 A | $35.94 |
| 8 | Mldg, Back Window¶ | | .2 | F47Z 1342456 C | $85.12 |
| 9 | Panel Assy, Lower Back¶ | | | | |
| | Vinyl | | #.5 | F37Z 1340374 AAK | $130.07 |
| | Carpet | | #.5 | F37Z 1340374 BAK | $267.83 |
| | ¶Blue listed, Order by Application | | | | |
| | #Includes R&R Back Window Mldg | | | | |
| 10 | Net, Lwr Back (a) | | | E7TZ 1355066 A | $102.37 |
| | (a) Included w/Lower Back Panel Assy | | | | |
| | Cover, Luggage¶ | | | F47Z 1345440 AAK | $237.50 |
| | ¶Blue listed, Order by Application | | | | |

## EXTERIOR TRIM

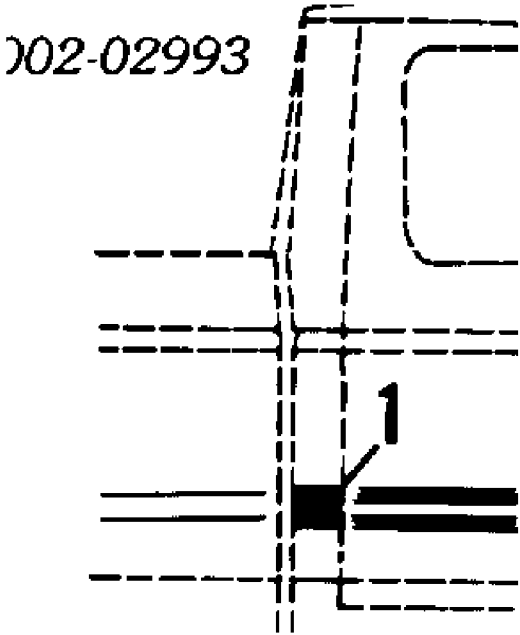


1 Moulding, Side¶

Adhesive

| | | | | | |
|---|---|---|---|---|---|
| Regular Cab | R | .2 | F87Z 1029314 AAC | $35.78 |
| | L | .2 | F87Z 1029314 AAC | $35.78 |
| Super Cab | R | .2 | XL5Z 1329314 APTM | $64.60 |
| | L | .2 | XL5Z 1329314 APTM | $64.60 |

¶Order by Application

Tape, Stripe-See Stripe Tape Section

Lamp, Stop/Cargo-See Rear Lamps Section

# QUARTER GLASS

## STATIONARY

### SUPER CAB

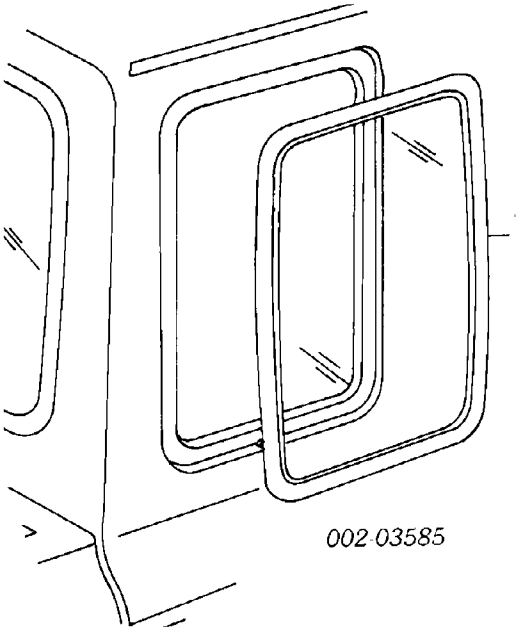


1 Glass, Quarter

| | | | | | |
|---|---|---|---|---|---|
| Ford, (Tint) | 93-9 | R | #1.1 | F37Z 1329700 A | $650.50 |
| | | L | #1.1 | F37Z 1329701 A | $619.52 |
| | 96-9 | R | #1.1 | F67Z 1329700 BA | $680.85 |
| | | L | #1.1 | F67Z 1329701 BA | $666.07 |
| NAGS | | | | | |
| Gray | | R | #1.1 | DQ08239YTY | $721.25 |
| | | L | #1.1 | DQ08240YTY | $721.25 |
| Privacy | | R | #1.1 | DQ08239YPY | $653.10 |
| | | L | #1.1 | DQ08240YPY | $653.10 |

#Includes R&R Corner Trim Panel, w/Jump Seats Add .3

## MOVEABLE

### SUPER CAB

1997 Ford Ranger XLT Extended Cab Pickup

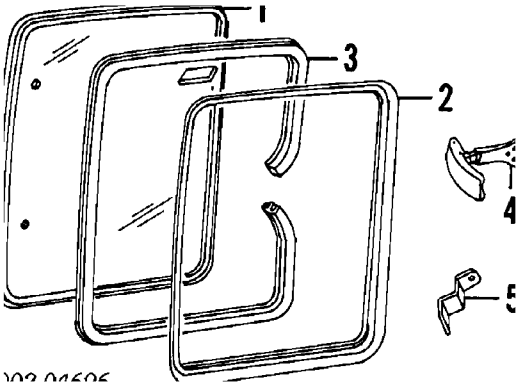


| | | | | | | |
|---|---|---|---|---|---|---|
| 1 | Glass, Quarter | | | | | |
| | Ford, (Tint) | 93-9 | R | .6 | F37Z 1329700 B | $725.38 |
| | | | L | .6 | F37Z 1329701 B | $621.75 |
| | | 96-9 | R | .6 | F67Z 1329700 AA | $706.22 |
| | | | L | .6 | F67Z 1329701 AA | $594.12 |
| | NAGS | | | | | |
| | Gray | | R | .6 | DQ08241YTY | $710.05 |
| | | | L | .6 | DQ08242YTY | $710.05 |
| | Privacy | | R | .6 | DQ08241YPY | $677.25 |
| | | | L | .6 | DQ08242YPY | $677.25 |
| 2 | Frame-Serviced w/Qtr Glass | | | | | |
| 3 | Weatherstrip | | R | #.1 | F37Z 1329904 A | $90.80 |
| | | | L | #.1 | F37Z 1329904 A | $90.80 |
| 4 | Latch | | R | #.2 | E6TZ 13303A24 A | $60.43 |
| | | | L | #.2 | E6TZ 13303A24 A | $60.43 |
| 5 | Hinge (2/Side) | | R | #.1 | E7TZ 1329954 A | $174.50 |
| | | | L | #.1 | E7TZ 1329954 A | $174.50 |

#w/Quarter Glass Removed

# BACK WINDOW

## Procedure 19

## FIXED WINDOW

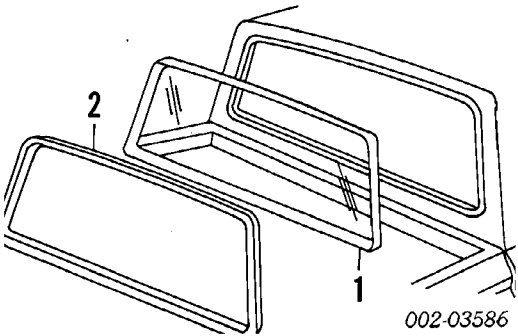


| | | | | |
|---|---|---|---|---|
| R&I Back Glass | | | | |
| Regular Cab | | 1.0 | | |
| Super Cab | #1.0 | | | |
| #w/Interior Trim Removed | | | | |
| 1 Glass, Back Window | | | | |
| Ford, (Tint) | | | | |
| Regular Cab | | 1.0 | E9TZ 1042006 B | $155.25 |
| Super Cab | #1.0 | | F37Z 1342006 A | $234.60 |
| NAGS | | | | |
| Regular Cab | | | | |
| Clear | | 1.0 | DB07640CLN | $225.60 |
| Green | | 1.0 | DB07640GTN | $187.50 |
| Super Cab | | | | |
| Gray | #1.0 | | DB08246YTN | $217.45 |
| #w/Interior Trim Removed | | | | |
| 2 Weatherstrip | | | | |
| Regular Cab | | | E3TZ 1042084 C | $50.10 |
| Super Cab | | | F37Z 1342084 A | $121.28 |

## SLIDING WINDOW

### REGULAR CAB

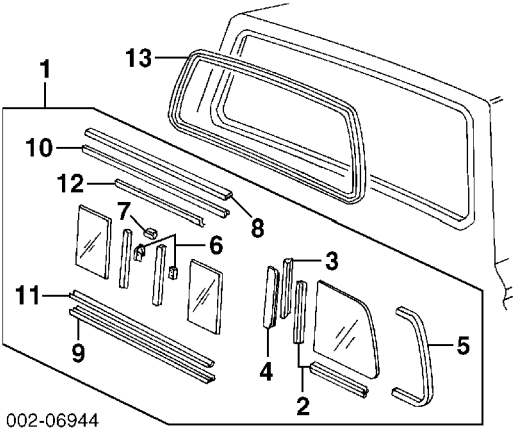


| | | | | | |
|---|---|---|---|---|---|
| | R&I Back Glass Assy | | | 1.0 | |
| 1 | Window Assy, Sliding | | | | |
| | Ford, (Tint) | | | 1.0 | F37Z 10422B30 A $304.52 |
| | NAGS, (Green) | | | 1.0 | DB08400GTY $465.75 |
| 2 | Weatherstrip, Window¶ | | R | | E3TZ 1042052 E $49.75 |
| | | | L | | E3TZ 1042052 E $49.75 |
| 3 | Seal, Glass Otr¶ | | R | | F37Z 10422A68 A $41.30 |
| | | | L | | F37Z 10422A68 A $41.30 |
| 4 | Bar, Division¶ | | R | | F37Z 1042076 A $31.38 |
| | | | L | | F37Z 1042076 A $31.38 |
| 5 | Filler, Frame¶ | | R | | E3TZ 10422B40 C $57.43 |
| | | | L | | E3TZ 10422B41 B $57.43 |
| 6 | Latch¶ | 93 | | | EOTZ 1040860 A $9.29 |
| | | 94-9 | | | F5TZ 1040860 A $46.40 |
| 7 | Stop, Window¶ | | R | | F37Z 1042310 A $7.05 |
| | | | L | | F37Z 1042310 A $7.05 |
| 8 | Frame, Back Glass Upr¶ | | | | F37Z 1040750 A $32.62 |
| 9 | Frame, Back Glass Lwr¶ | | | | F37Z 1042162 A $24.62 |
| 10 | Run, Back Glass Upr¶ | | | | F37Z 10422A36 A $54.85 |
| 11 | Run, Back Glass Lwr¶ | | | | F37Z 10422A20 A $48.08 |
| 12 | Filler, Back Glass Upr¶ | | | | F37Z 10422B68 A $29.52 |

¶Included w/Ford Sliding Window Assy

| | | | | | |
|---|---|---|---|---|---|
| 13 | Weatherstrip | | | | E9TZ 1042084 A $140.38 |

SLIDING WINDOW

SUPER CAB

1997 Ford Ranger XLT Extended Cab Pickup

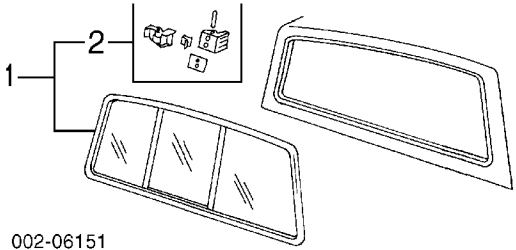


002-06151

| | | | | | |
|---|---|---|---|---|---|
| | R&I Back Glass Assy | | #1.0 | | |
| | #w/Interior Trim Removed | | | | |
| 1 | Window Assy, Sliding | | | | |
| | Ford, (Tint) | 93-9 | #1.0 | F47Z 13422B30 A | $252.02 |
| | | 96-9 | #1.0 | F67Z 13422B30 A | $252.65 |
| | NAGS | | | | |
| | Gray | | #1.0 | DB06961YTY | $416.20 |
| | Privacy | | #1.0 | DB06961YPY | $322.60 |
| | #w/Interior Trim Removed | | | | |
| 2 | Latch¶ | | | F2TZ 1327158 A | $44.90 |

¶Included w/Ford Sliding Window Assy

# PICKUP BED

## Procedures 21 and 28

## SHEET METAL

### STYLESIDE

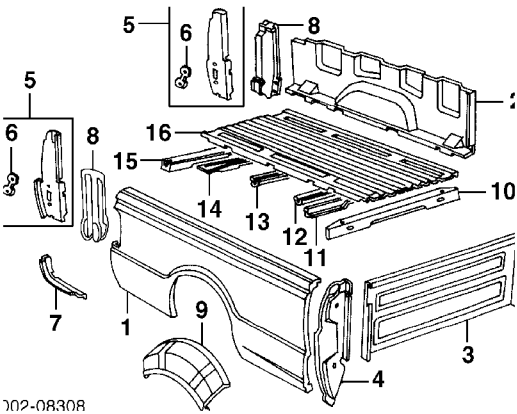


| | | |
|---|---|---|
| Refinish Complete Bed Assy (Includes Tailgate) | | |
| 6 Foot Bed (Includes Tailgate) | | #8.5 |
| Add for 2 Tone (Includes Tailgate) | | 2.1 |
| Refinish Complete Bed Assy 7 Foot Bed (Includes Tailgate) | | #9.0 |
| Add for 2 Tone (Includes Tailgate) | | 2.6 |

#Includes Refinish Floor, Insides & Extensions

| | | |
|---|---|---|
| Refinish Side Panel | | |
| 6 Foot Bed | | |
| Outside | R | 2.8 |
| | L | 2.8 |
| Inside | R | 1.2 |
| | L | 1.2 |
| 7 Foot Bed | | |
| Outside | R | 3.4 |
| | L | 3.4 |
| Inside | R | 1.4 |
| | L | 1.4 |
| Refinish Front Panel Complete | | 2.0 |
| Refinish Inside | | 1.0 |

| | | | | | | |
|---|---|---|---|---|---|---|
| Refinish Floor Pan Complete | | | | | | |
| 6 Foot Bed | | | #2.8 | | | |
| 7 Foot Bed | | | #3.2 | | | |
| #Includes Rear Cross Sill | | | | | | |
| Refinish Corner Pillar | | R | | .5 | | |
| | | L | | .5 | | |
| Refinish Front Panel Extension | | R | | .5 | | |
| | | L | | .5 | | |
| Refinish Fuel Door | | | | .4 | | |
| Refinish Rear Cross Sill | | | | 1.0 | | |
| R&I Bed Assy | | | | 2.5 | | |
| 1 Panel, Outer | | | | | | |
| 6 Foot Bed | | | | | | |
| w/Wheel Opening Mldgs | | R | #11.4 | | F37Z 9927840 D | $785.72 |
| | | L | #11.9 | | F37Z 9927841 D | $707.83 |
| #Includes R&I Bed & R&R Wheel Opening Mldg | | | | | | |
| w/o Wheel Opening Mldgs | | R | #11.0 | | F37Z 9927840 B | $660.90 |
| | | L | #11.5 | | F37Z 9927841 B | $678.97 |
| #Includes R&I Bed Assy | | | | | | |
| 7 Foot Bed | | | | | | |
| w/Wheel Opening Mldgs | | R | #12.4 | | F37Z 9927840 C | $632.65 |
| | | L | #12.9 | | F37Z 9927841 C | $657.52 |
| #Includes R&I Bed & R&R Wheel Opening Mldg | | | | | | |
| w/o Wheel Opening Mldgs | | R | #12.0 | | F37Z 9927840 A | $877.58 |
| | | L | #12.5 | | F37Z 9927841 A | $836.80 |
| #Includes R&I Bed Assy | | | | | | |
| Door, Fuel | | | | .3 | F37Z 99405A26 A | $54.53 |
| Spring, Fuel Door | | | | | F37Z 99405A24 A | $21.22 |
| Housing, Fuel Filler | | | #.5 | | F37Z 9927936 A | $53.98 |
| #Included in R&R Outer Panel | | | | | | |
| 2 Panel, Inner | | | | | | |
| 6 Foot Bed | 93-9 | R | #3.0 | | E4TZ 9927864 B | $229.55 |
| | | L | #3.0 | | E4TZ 9927865 B | $234.20 |
| | 97 | R | #3.0 | | 6L5Z 9927864 B | $248.40 |
| | | L | #3.0 | | 6L5Z 9927865 B | $269.23 |
| 7 Foot Bed | 93-9 | R | #3.0 | | E4TZ 9927864 A | $257.88 |
| | | L | #3.0 | | E9TZ 9927865 A | $110.00 |
| | 97 | R | #3.0 | | 6L5Z 9927864 A | $202.33 |

| | | | | | | |
|---|---|---|---|---|---|---|
| | | L | #3.0 | | 6L5Z 9927865 A | $280.50 |
| | #w/Outer Panel Removed | | | | | |
| 3 | Panel, Front | | #6.5 | | 4L5Z 9900124 AA | $280.50 |
| | #Includes R&I Bed Assy, Deduct 1.0 for Each Front Panel Extension Removed | | | | | |
| 4 | Ext, Front Panel | R | #2.0 | | F37Z 9900374 A | $61.20 |
| | | L | #2.0 | | F37Z 9900375 A | $61.20 |
| | #w/Outer Panel Removed | | | | | |
| 5 | Pillar Assy, Rear | R | | 2.0 | 6L5Z 9941022 A | $66.12 |
| | | L | | 2.0 | 1L5Z 9941023 BA | $66.67 |
| 6 | Plate, Anchor¶ | R | | | E7TZ 9943488 A | $4.28 |
| | | L | | | E7TZ 9943488 A | $4.28 |
| | ¶Included w/Rear Pillar Assy | | | | | |
| 7 | Reinf, Rear | R | | | 3L5Z 99279C38 AA | $58.50 |
| | | L | | | 3L5Z 99279C39 AA | $46.25 |
| 8 | Pillar, Corner | R | | | F37Z 9941032 A | $116.47 |
| | | L | | | F37Z 9941033 A | $215.48 |
| 9 | Panel, Wheelhouse | R | #2.5 | | F37Z 9927886 A | $81.08 |
| | | L | #2.5 | | F37Z 9927887 A | $78.70 |
| | #w/Outer Panel Removed | | | | | |
| | Brace, Bed Side | | | | | |
| | Front | R | | .2 | F37Z 9928260 A | $8.33 |
| | | L | | .2 | F37Z 9928260 A | $8.33 |
| | Rear | | | | | |
| | 6 Foot Bed | R | | .2 | E8TZ 9927726 B | $28.55 |
| | | L | | .2 | E8TZ 9927726 B | $28.55 |
| | 7 Foot Bed | R | | .2 | E8TZ 9927726 A | $7.37 |
| | | L | | .2 | E8TZ 9927726 A | $7.37 |
| 10 | Sill, Front Cross | | #2.5 | | E9TZ 9910610 A | $127.33 |
| 11 | Sill, Floor Cross #2 | | #2.5 | | E3TZ 9910665 A | $100.27 |
| 12 | Sill, Floor Cross #3 | | #2.5 | | F57Z 9910940 A | $50.97 |
| 13 | Sill, Floor Cross #4 | | #2.5 | | FOTZ 99108A08 A | $46.40 |
| 14 | Sill, Floor Cross #5 | | #2.5 | | E3TZ 99108A12 A | $108.70 |
| | #w/Bed Assy Removed | | | | | |
| 15 | Sill, Rear Cross | | #6.0 | | XL5Z 9910608 AA | $60.53 |
| | #w/Bumper Removed, Deduct 1.5 for Each Rear Pillar Removed | | | | | |
| 16 | Pan, Floor | | | | | |
| | 6 Foot Bed | | #21.0 | | F87Z 9911215 BA | $451.00 |
| | 7 Foot Bed | | #23.5 | | F87Z 9911215 AA | $243.25 |

#w/Bed Assy Removed, Deduct 2.5 w/Each Inner Panel Removed, Deduct 3.0 w/Rear Floor Cross Sill Removed, Deduct 2.5 w/Front Panel Removed, Deduct 1.5 w/Each Front or Number 2, 3, 4 or 5 Floor Cross Sill Removed

## SHEET METAL

### FLARESIDE

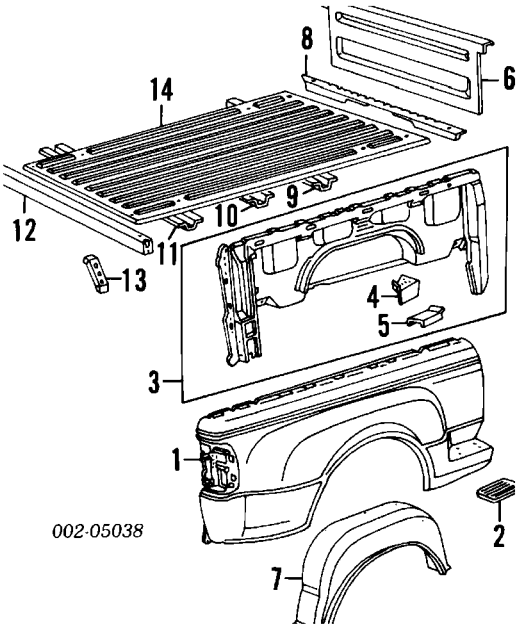


| | | | | |
|---|---|---|---|---|
| Refinish Bed Assy Complete (Includes Tailgate) | | #8.8 | | |
| #Includes Refinish Floor & Insides | | | | |
| Refinish Side Panel | | | | |
| Outer | R | 3.2 | | |
| | L | 3.2 | | |
| Inner Complete | R | 1.2 | | |
| | L | 1.2 | | |
| Refinish Front Panel Complete | | 2.0 | | |
| Refinish Inside | | 1.0 | | |
| Refinish Floor Pan Complete | | #2.8 | | |
| #Includes Rear Cross Sill | | | | |
| Refinish Fuel Door | | .4 | | |
| Refinish Rear Cross Sill | | .8 | | |
| R&I Bed Assy | | 2.5 | | |
| 1 Panel, Outer | R | #2.7 | F87Z 8327840 AA | $556.62 |
| | L | #2.9 | F87Z 8327841 AA | $565.90 |

#Includes Set Back Bed Assy, R&I Rear Combination Lamp, R&R Step Mat, Quarter Upper Mldg & Fuel Door on Left Side

| | | | | | | |
|---|---|---|---|---|---|---|
| 2 | Mat, Step | R | | .2 | F37Z 8320012 A | $16.52 |
| | | L | | .2 | F37Z 8320013 A | $17.08 |
| | Door, Fuel | | | .2 | F37Z 99405A26 A | $54.53 |
| | Spring, Fuel Door | | | | F37Z 99405A24 A | $21.22 |
| 3 | Panel Assy, Inner | R | #3.0 | | F87Z 8327864 AA | $832.32 |
| | | L | #3.0 | | F87Z 8327865 AA | $832.32 |
| | #w/Outer Panel Removed | | | | | |
| 4 | Bracket, Step¶ | R | #.5 | | F37Z 83200L52 A | $176.32 |
| | | L | #.5 | | F37Z 83200L53 A | $49.72 |
| | #w/Outer Panel Removed | | | | | |
| 5 | Support, Step¶ | R | | .5 | F37Z 83200A22 A | $801.33 |
| | | L | | .5 | F37Z 83200A23 A | $107.70 |
| | ¶Included w/Inner Panel Assy | | | | | |
| 6 | Panel, Front | | #6.5 | | F37Z 8300124 A | $310.00 |
| | #Includes R&I Bed Assy, Deduct 1.0 for Each Inner Panel Removed | | | | | |
| 7 | Panel, Wheelhouse | R | #.4 | | F37Z 8327886 A | $155.42 |
| | | L | #.4 | | F37Z 8327887 A | $71.02 |
| | #Included in R&R Outer Panel | | | | | |
| 8 | Sill, Front Cross | | #2.5 | | F37Z 8310610 A | $180.07 |
| 9 | Sill, Floor Cross #3 | | #2.5 | | F57Z 9910940 A | $50.97 |
| 10 | Sill, Floor Cross #4 | | #2.5 | | FOTZ 99108A08 A | $46.40 |
| 11 | Sill, Floor Cross #5 | | #2.5 | | E3TZ 99108A12 A | $108.70 |
| | #w/Bed Assy Removed | | | | | |
| 12 | Sill, Rear Cross | | #6.0 | | F37Z 8310608 A | $217.57 |
| | #w/Bumper & Outer Panels Removed, Deduct 1.5 for Each Inner Panel Removed | | | | | |
| 13 | Reinf, Rear Cross | R | | .3 | F37Z 8310760 A | $67.00 |
| | | L | | .3 | F37Z 8310760 A | $67.00 |
| 14 | Pan, Floor | | #21.0 | | F87Z 9911215 BA | $451.00 |

#w/Bed Assy Removed, Deduct 2.5 w/Each Inner Panel Assy Removed, Deduct 3.0 w/Rear Cross Sill Removed, Deduct 2.5 w/Front Panel Removed, Deduct 1.5 w/Each Front or Number 3, 4 or 5 Floor Cross Sill Removed

## EXTERIOR TRIM

### STYLESIDE

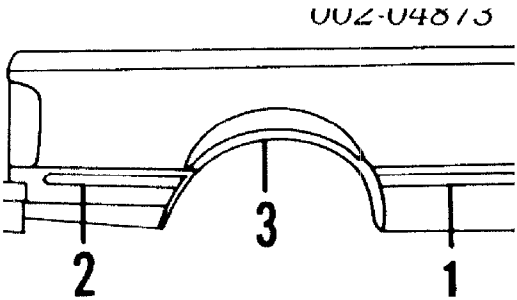


| | | | | | |
|---|---|---|---|---|---|
| R&I Wheel Opening Mldg | R | | .3 | | |
| | L | | .3 | | |
| Moulding, Side¶ | | | | | |
| Adhesive | | | | | |
| 1 Front | | | | | |
| 6 Foot Bed | R | | .2 | XL5Z 9929076 DPTM | $71.57 |
| | L | | .2 | XL5Z 9929077 DPTM | $51.25 |
| 7 Foot Bed | R | | .2 | XL5Z 9929076 CPTM | $41.48 |
| | L | | .2 | XL5Z 9929077 APTM | $48.65 |
| 2 Rear | | | | | |
| 6 Foot Bed | R | | .2 | XL5Z 9929038 BPTM | $55.03 |
| | L | | .2 | XL5Z 9929039 BPTM | $49.45 |
| 7 Foot Bed | R | | .2 | XL5Z 9929038 APTM | $52.27 |
| | L | | .2 | XL5Z 9929039 APTM | $52.27 |
| 3 Mldg, Wheel Opening¶ | | | | | |
| Clip-On | R | | .4 | F37Z 9929164 AY | $154.45 |
| | L | | .4 | 4L5Z 9929165 | $99.90 |
| ¶Opal listed, Order by Application | | | | | |
| Shield, Front Stone | R | #.1 | | F47Z 99292A22 B | $14.65 |
| | L | #.1 | | F37Z 99292A23 B | $14.65 |
| Shield, Rear Stone | R | #.1 | | F37Z 99292A22 A | $19.08 |
| | L | #.1 | | F37Z 99292A23 A | $19.08 |
| #Time is for Installation only | | | | | |
| Mudguard | | | .3 | F37Z 16A550 E | $27.13 |
| Brkt, Mudguard | R | | | F37Z 16L554 B | $81.00 |
| | L | | | F37Z 16L555 B | $79.57 |

## EXTERIOR TRIM

### FLARESIDE

1997 Ford Ranger XLT Extended Cab Pickup

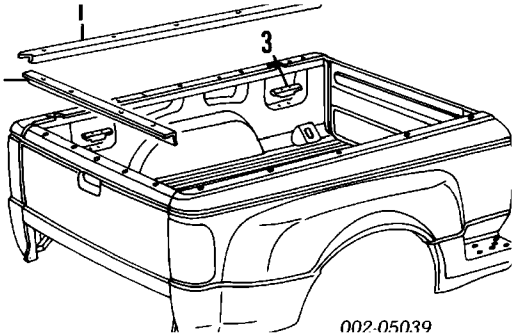


| | | | | | |
|---|---|---|---|---|---|
| | R&I Quarter Upper Moulding | R | .2 | | |
| | | L | .2 | | |
| | R&I Tailgate Upper Moulding | | .2 | | |
| 1 | Moulding, Quarter Upper | R | .2 | F37Z 83291A40 A | $141.43 |
| | | L | .2 | F37Z 83291A41 A | $141.43 |
| 2 | Moulding, Tailgate Upper | | .2 | F37Z 8340602 A | $124.33 |
| 3 | Hook, Bed (4) | R | .1 | F37Z 8300064 A | $25.28 |
| | | L | .1 | F37Z 8300064 A | $25.28 |
| | Mudguard | | | | |
| | 2WD | | .3 | F37Z 16A550 E | $27.13 |
| | 4WD | | .3 | F37Z 16A550 G | $14.77 |
| | Brkt, Mudguard | R | | F37Z 16L554 C | $24.60 |
| | | L | | F37Z 16L555 C | $29.23 |
| | SPARE WHEEL CARRIER | | | | |
| | Carrier, Spare Wheel | | | F2TZ 1405 A | $43.68 |
| | Support, Carrier | | | E3TZ 1443 A | $43.18 |
| | Bracket, Upper Carrier | | | FT2Z 1A458 A | |
| | Bracket, Lower Carrier | | | N.A. | |
| | Retainer, Carrier | | | E3TZ 1A439 A | $26.57 |
| | Bolt, Carrier | | | | |
| | 12x1.75x154.5mm | | | E3TZ 1408 C | $5.33 |
| | 12x1.75x194mm | | | E3TZ 1408 A | $24.08 |

# TAILGATE

## STYLESIDE

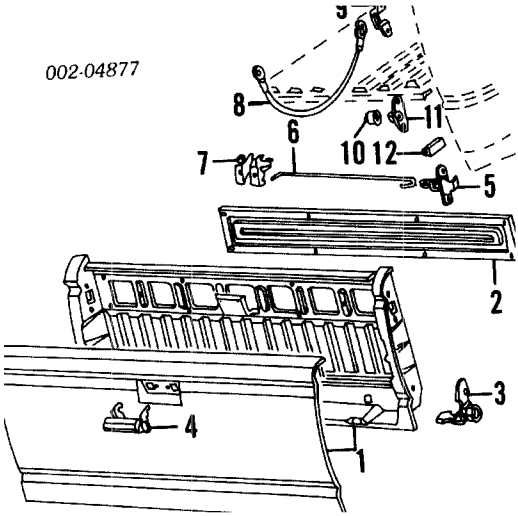


| | | | | | | |
|---|---|---|---|---|---|---|
| | Refinish Tailgate Complete | | #3.0 | | | |
| | #Includes Access Cover | | | | | |
| | Refinish Outside | | | 1.9 | | |
| | Refinish Inside | | | 1.0 | | |
| | Refinish Access Cover | | | .5 | | |
| | Refinish Hinge Retainer | R | | .2 | | |
| | | L | | .2 | | |
| | Refinish Roller Assy | R | | .2 | | |
| | | L | | .2 | | |
| | R&I Tailgate | | | .2 | | |
| 1 | Tailgate | | | 1.0 | 1L5Z 9940700 BA | $333.03 |
| 2 | Cover, Access Opening | | | .2 | F37Z 9943121 A | $70.82 |
| 3 | Retainer, Hinge | R | #.5 | | F37Z 99430B12 A | $54.70 |
| | | L | #.5 | | F37Z 99430B13 A | $75.92 |
| | #w/Tailgate Removed | | | | | |
| 4 | Handle | | | .4 | F37Z 9943400 A | $42.70 |
| | Nameplate | | | | | |
| | "Ford", (Oval) | | | .2 | F2TZ 9842528 A | $14.02 |
| | Transfer¶ | | | | | |
| | "Ford", (Letters) | | #.3 | | F37Z 9942528 AA | $20.68 |
| | "STX" | | #.2 | | F37Z 9942528 BM | $20.05 |
| | ¶Titanium listed, Order by Application | | | | | |
| | #Time is for Installation only | | | | | |
| 5 | Bracket, Tailgate | R | | .3 | 1L5Z 9943150 AA | $42.28 |
| | | L | | .3 | 1L5Z 9943150 AA | $42.28 |
| 6 | Link, Release | R | | | F37Z 99431A78 A | $9.30 |
| | | L | | | F37Z 99431A78 A | $9.30 |

| | | | | | | |
|---|---|---|---|---|---|---|
| 7 | Latch | | | .2 | 6L5Z 9943170 A | $13.22 |
| 8 | Cable, Tailgate Check | R | | .2 | F37Z 9943052 A | $24.28 |
| | | L | | .2 | F37Z 9943053 A | $18.93 |
| 9 | Latch, Gate (On Body) | R | | .2 | F37Z 99431B54 A | $15.12 |
| | | L | | .2 | F37Z 99431B54 A | $15.12 |
| 10 | Insert, Hinge Opening | R | | | E7TZ 99430B22 A | $5.81 |
| | | L | | | F65Z 99430B23 AA | $5.95 |
| 11 | Roller | | | | | |
| | 1993-96 | R | | .3 | E7TZ 99430B38 A | $13.53 |
| | | L | | .3 | E7TZ 99430B39 A | $13.53 |
| | 1997 | | | | | |
| | To 1-27-97 | R | | .3 | E7TZ 99430B38 A | $13.53 |
| | | L | | .3 | E7TZ 99430B39 A | $13.53 |
| | From 1-27-97 | R | | .3 | E7TZ 99430B38 A | $13.53 |
| | | L | | .3 | E7TZ 99430B39 A | $13.53 |
| 12 | Stop | R | | | E3TZ 9943610 A | $6.38 |
| | | L | | | E3TZ 9943610 A | $6.38 |
| | FLARESIDE | | | | | |
| | Refinish Tailgate Complete | | #3.0 | | | |
| | #Includes Access Cover | | | | | |
| | Refinish Outside (Only) | | | 1.9 | | |
| | Refinish Inside (Only) | | | 1.0 | | |
| | Refinish Access Cover | | | .5 | | |
| | Refinish Roller Assy | R | | .2 | | |
| | | L | | .2 | | |
| | R&I Tailgate | | | .2 | | |
| 1 | Tailgate | | | 1.2 | F37Z 8340700 A | $364.12 |
| 2 | Cover, Access Opening | | | .2 | 2L5Z 8343121 AA | $90.90 |
| 3 | Retainer, Hinge | R | #.5 | | F37Z 99430B12 A | $54.70 |
| | | L | #.5 | | F37Z 99430B13 A | $75.92 |
| | #w/Tailgate Removed | | | | | |
| 4 | Handle | | #.5 | | F37Z 9943400 A | $42.70 |
| | #Includes R&R Access Opening Cover | | | | | |
| | Nameplate | | | | | |
| | "Ford", (Oval) | | | .2 | F2TZ 9842528 A | $14.02 |
| | Transfer, Tailgate-Stripe Tape Section | | | | | |
| 5 | Bracket, Tailgate | R | | .3 | 1L5Z 9943150 AA | $42.28 |
| | | L | | .3 | 1L5Z 9943150 AA | $42.28 |
| 6 | Link, Release | R | | | F37Z 83431A78 A | $14.00 |
| | | L | | | F37Z 83431A78 A | $14.00 |
| 7 | Latch | | | .2 | 6L5Z 9943170 A | $13.22 |
| 8 | Cable, Tailgate Check | R | | .2 | F37Z 9943052 A | $24.28 |
| | | L | | .2 | F37Z 9943053 A | $18.93 |

| | | | | | |
|---|---|---|---|---|---|
| 9 Latch, Gate (On Body) | | R | .2 | F37Z 99431B54 A | $15.12 |
| | | L | .2 | F37Z 99431B54 A | $15.12 |
| 10 Insert, Hinge Opening | | R | | E7TZ 99430B22 A | $5.81 |
| | | L | | F65Z 99430B23 AA | $5.95 |
| 11 Roller | | | | | |
| 1993-96 | | R | .3 | E7TZ 99430B38 A | $13.53 |
| | | L | .3 | E7TZ 99430B39 A | $13.53 |
| | 1997 | | | | |
| To 1-27-97 | | R | .3 | E7TZ 99430B38 A | $13.53 |
| | | L | .3 | E7TZ 99430B39 A | $13.53 |
| From 1-27-97 | | R | .3 | E7TZ 99430B38 A | $13.53 |
| | | L | .3 | E7TZ 99430B39 A | $13.53 |
| 12 Stop | | | | E3TZ 9943610 A | $6.38 |

# REAR SUSPENSION

Procedure 23

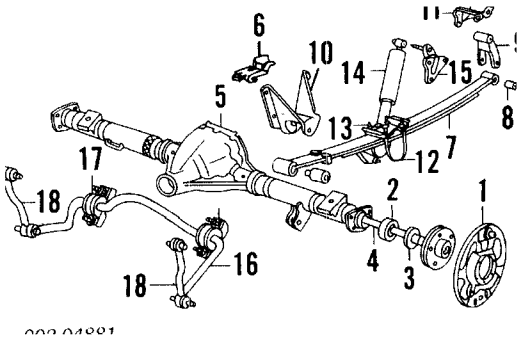


| | |
|---|---|
| R&I Suspension/Axle Assy | 2.2 |
| Check Rear Alignment | .8 |
| Add to Adjust Front Alignment | 1.6 |
| Bleed Brake System | .3 |

NOTE: R&I/R&R Does Not include alignment or bleed brake system.

| | | | | | | |
|---|---|---|---|---|---|---|
| | Drum, Brake | | | | | |
| | 9" Brakes | | R | #.4 | YL5Z 1V126 CA | $85.85 |
| | | | L | #.4 | YL5Z 1V126 CA | $85.85 |
| | 10" Brakes | | R | #.4 | YL5Z 1V126 BA | $85.85 |
| | | | L | #.4 | YL5Z 1V126 BA | $85.85 |
| | #R&R Both .6 | | | | | |
| 1 | Plate, Backing | | | | | |
| | 9" Brakes | 93-9 | R | #1.0 | E9ZZ 2211 A | $106.98 |
| | | | L | #1.0 | E9ZZ 2212 A | $77.58 |
| | | 95-9 | R | #1.0 | F57Z 2211 B | $57.92 |
| | | | L | #1.0 | F57Z 2212 B | $60.08 |
| | 10" Brakes | 93-9 | R | #1.0 | E69Z 2211 A | $72.82 |
| | | | L | #1.0 | F39Z 2212 A | $95.10 |
| | | 95-9 | R | #1.0 | F57Z 2211 A | $51.38 |
| | | | L | #1.0 | F57Z 2212 A | $41.08 |
| | #w/Axle Housing Removed Deduct .5 | | | | | |
| 2 | Bearing, Axle | | R | #1.5 | 3W1Z 1225 AA | $33.77 |
| | | | L | #1.5 | 3W1Z 1225 AA | $33.77 |
| 3 | Seal, Grease | 93-9 | R | #1.5 | F67Z 1S177 ACA | $5.50 |
| | | | L | #1.5 | F67Z 1S177 ACA | $5.50 |
| | | 97 | R | #1.5 | F67Z 1S177 ACA | $5.50 |
| | | | L | #1.5 | F67Z 1S177 ACA | $5.50 |
| 4 | Shaft, Axle¶ | | R | #1.5 | F37Z 4234 A | $217.78 |

| | | | | | | |
|---|---|---|---|---|---|---|
| | | | L | #1.5 | F37Z 4234 B | $239.58 |
| | #R&R One Side Complete, R&R Both Sides 2.3 | | | | | |
| 5 | Housing, Axle¶ | | | #7.0 | F37Z 4010 C | $1,111.27 |
| | ¶Order by Application | | | | | |
| | #Includes R&R Drums, Axles Shafts, Axle Bearings, Grease Seals & Adjust Ring & Pinion | | | | | |
| | Hose, Brake | 93-9 | R | #.3 | 6L5Z 2282 AA | $39.68 |
| | | | L | #.3 | 6L5Z 2282 AA | $39.68 |
| | | 95-9 | R | #.3 | 6L5Z 2282 AA | $39.68 |
| | | | L | #.3 | 6L5Z 2282 AA | $39.68 |
| | #w/Backing Plate Removed Deduct .2 | | | | | |
| 6 | Sensor, Speed | | | .5 | F85Z 9E731 AB | $27.95 |
| 7 | Spring (a) | | R | #1.2 | F37Z 5560 E | $169.39 |
| | | | L | #1.2 | F37Z 5560 E | $169.39 |
| | (a) Order by Application | | | | | |
| | #R&R Both Sides 2.2, w/Axle Housing Removed Deduct .6 Each Side | | | | | |
| 8 | Bushing, Spring-Serviced w/Spring | | | | | |
| 9 | Shackle, Spring | | | | | |
| | Front | | R | #.6 | E6TZ 5630 B | $32.01 |
| | | | L | #.6 | E6TZ 5630 B | $32.01 |
| | Rear | | R | #.6 | E6TZ 5630 C | $74.63 |
| | | | L | #.6 | E6TZ 5630 C | $74.63 |
| | #w/Spring Removed Deduct .4 | | | | | |
| 10 | Bracket, Spring Front | | R | #.5 | F57Z 5775 A | $34.34 |
| | | | L | #.5 | F57Z 5775 A | $34.34 |
| 11 | Bracket, Spring Rear | | R | #.5 | 4L5Z 5775 AA | $27.98 |
| | | | L | #.5 | 4L5Z 5775 AA | $27.98 |
| | #w/Spring Assy Removed | | | | | |
| 12 | U-Bolt, Spring | | | | | |
| | 2WD | | R | #.3 | * N807321 S436 | $15.75 |
| | | | L | #.3 | * N807321 S436 | $15.75 |
| | 4WD | | | | | |
| | Regular Cab | | R | #.3 | FOTZ 5705 A | $28.57 |
| | | | L | #.3 | FOTZ 5705 A | $28.57 |
| | Super Cab | | R | #.3 | E3TZ 5705 B | $19.98 |
| | | | L | #.3 | E3TZ 5705 B | $19.98 |
| 13 | Plate, U-Bolt | | R | #.5 | F2TZ 5796 A | $28.82 |
| | | | L | #.5 | F2TZ 5796 A | $28.82 |
| | #Included in R&R Spring Assy | | | | | |

| | | | | | |
|---|---|---|---|---|---|
| 14 | Absorber, Shock¶ | | | | |
| | 2WD | R | #.5 | 5U2Z 18V125 BT | $42.68 |
| | | L | #.5 | 5U2Z 18V125 BT | $42.68 |
| | 4WD | R | #.5 | 5U2Z 18V125 BU | $45.00 |
| | | L | #.5 | 5U2Z 18V125 BU | $45.00 |
| | ¶Order by Application | | | | |
| | #R&R Both .8, w/Axle Housing Removed Deduct .3 | | | | |
| 15 | Bracket, Shock | R | #.5 | E3TZ 18169 A | $41.00 |
| | | L | #.5 | E3TZ 18169 A | $41.00 |
| | #w/Shock Removed Deduct .2 | | | | |
| 16 | Bar, Stabilizer | | #.7 | E9TZ 5A772 B | $155.00 |
| 17 | Bracket, Bar | R | #.7 | E4TZ 5486 B | $8.75 |
| | | L | #.7 | E4TZ 5486 B | $8.75 |
| | Bushing, Bracket | R | #.7 | E7TZ 5493 A | $16.48 |
| | | L | #.7 | E7TZ 5493 A | $16.48 |
| | Mounting Kit, Bar | R | #.7 | E3TZ 5C489 A | $74.83 |
| | | L | #.7 | E3TZ 5C489 B | $67.91 |
| 18 | Link, Bar | | | | |
| | 2WD | R | #.7 | F77Z 5K484 GA | $32.98 |
| | | L | #.7 | F77Z 5K484 GA | $32.98 |
| | 4WD | R | #.7 | F77Z 5K484 HA | $27.48 |
| | | L | #.7 | F77Z 5K484 HA | $27.48 |
| | #R&R Complete, w/Axle Housing Removed Deduct .3 | | | | |

# FUEL TANK

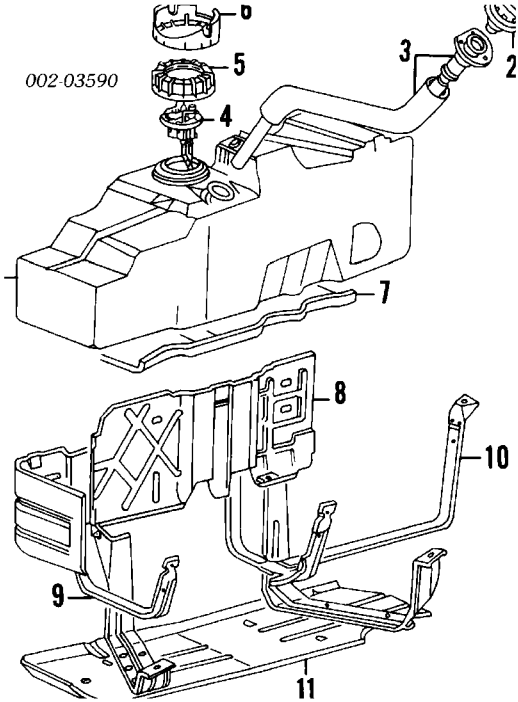


| | | | | |
|---|---|---|---|---|
| R&I Fuel Tank | | 1.2 | | |

NOTE: R&I/R&R Does Not include drain and refill.

| | | | | |
|---|---|---|---|---|
| 1 Tank, Fuel | | | | |
| Regular Cab | | | | |
| 17 Gallon | | 1.6 | F57Z 9002 N | $419.93 |
| 21 Gallon | 93-9 | 1.6 | FO7Z 9002 G | $323.45 |
| | 95-9 | 1.6 | F57Z 9002 E | $299.53 |
| Super Cab | 93-9 | 1.6 | FO7Z 9002 C | $499.42 |
| | 95-9 | 1.6 | F57Z 9002 P | $314.17 |
| 2 Cap, Filler | | | F5TZ 9030 B | $27.62 |
| 3 Pipe, Filler | | | | |
| 6 Foot Bed | | | | |
| Styleside | | #1.5 | F47Z 9034 P | $417.43 |
| Flareside | | #1.5 | F47Z 9034 R | $366.51 |
| 7 Foot Bed | | #1.5 | F47Z 9034 N | $525.92 |

#w/Fuel Tank or Bed Outer Panel Removed Deduct 1.2

| | | | |
|---|---|---|---|
| 4 Gauge, Tank Unit¶ | | | |
| Regular Cab | #1.6 | F57Z 9H307 EA | $414.37 |
| Super Cab | #1.6 | F57Z 9H307 FA | $400.47 |

¶Includes Fuel Pump

| | | | | | |
|---|---|---|---|---|---|
| | #Included in R&R Fuel Tank | | | | |
| 5 | Ring, Retaining | | | E99Z 9A307 A | $46.49 |
| 6 | Shield, Hose | | | E97Z 9C291 A | $53.75 |
| 7 | Shield, Tank | 93-9 | | E9TZ 9K014 B | $22.73 |
| | | 95-9 | | FO7Z 9K014 B | $55.72 |
| 8 | Shield, Heat | | | | |
| | Regular Cab | | | | |
| | 17 Gallon Tank | 93-9 | #.3 | F37Z 9A032 D | $158.68 |
| | | 95-9 | #.3 | F57Z 9A032 K | $366.74 |
| | 21 Gallon Tank | 93-9 | #.3 | F37Z 9A032 E | $104.87 |
| | | 95-9 | #.3 | F57Z 9A032 L | $170.79 |
| | Super Cab | 93-9 | #.3 | F37Z 9A032 G | $114.20 |
| | | 95-9 | #.3 | F57Z 9A032 M | $439.15 |
| | #w/Tank Removed | | | | |
| 9 | Strap, Tank Rear | | | | |
| | 1993-94 | | | | |
| | 108" WB | | #.6 | E9TZ 9054 K | $414.00 |
| | 114" WB | | #.6 | E9TZ 9054 J | $166.47 |
| | 125" WB | | #.6 | E9TZ 9054 H | $151.72 |
| | 1995-97 | | #.6 | F57Z 9054 H | $252.55 |
| 10 | Strap, Tank Front | 93-9 | #.6 | E97Z 9054 J | $185.02 |
| | | 95-9 | #.6 | F57Z 9054 G | $190.74 |
| | #R&R Complete, Includes R&R Skid Plate | | | | |
| 11 | Plate, Skid¶ | | .5 | F57Z 9A147 C | $187.66 |

¶Order by Application

# REAR LAMPS

## COMBINATION LAMP

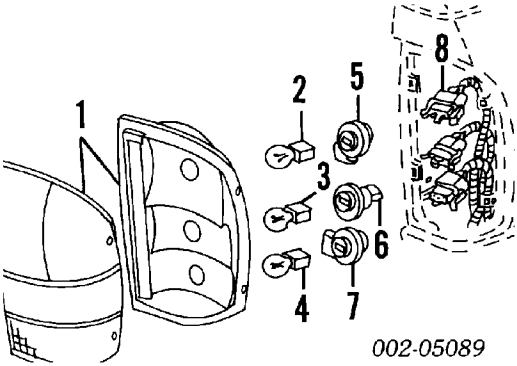


| | | | | | |
|---|---|---|---|---|---|
| R&I Combination Lamp | R | | .2 | | |
| | L | | .2 | | |
| 1 Lamp, Combination | R | | .3 | F37Z 13404 A | $47.54 |
| | L | | .3 | F37Z 13405 A | $47.54 |
| 2 Bulb, Tail/Stop/Signal | R | #.2 | | F4CZ 13466 A | $2.33 |
| | L | #.2 | | F4CZ 13466 A | $2.33 |
| 3 Bulb, Back-Up | R | #.2 | | F5DZ 13466 BA | $2.99 |
| | L | #.2 | | F5DZ 13466 BA | $2.99 |
| 4 Bulb, Signal | R | #.2 | | F4CZ 13466 A | $2.33 |
| | L | #.2 | | F4CZ 13466 A | $2.33 |

#R&R One Side Complete, Included in R&R Combination Lamp

| | | | | |
|---|---|---|---|---|
| 5 Socket, Stop Lamp | R | | F37Z 13411 A | $12.98 |
| | L | | F37Z 13411 A | $12.98 |
| 6 Socket, Back-Up | R | | F1TZ 13411 G | $15.58 |
| | L | | F1TZ 13411 G | $15.58 |
| 7 Socket, Signal | R | | F1TZ 13411 F | $14.38 |
| | L | | F1TZ 13411 G | $15.58 |
| 8 Wire, Tail Lamp | R | | F67Z 13A409 AA | $325.95 |
| | L | | F67Z 13A409 AA | $325.95 |

## LICENSE LAMP

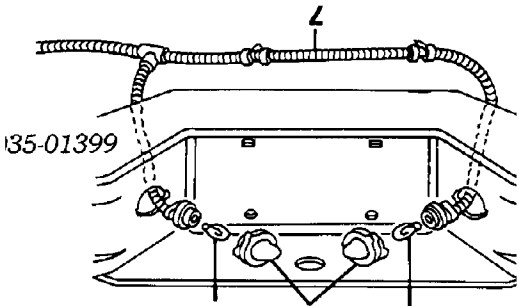

| | | | | | |
|---|---|---|---|---|---|
| 1 | Lamp, License | | | | |
| | w/Bumper | | | | |
| | Black | R | #.2 | F37Z 13550 AA | $6.95 |
| | | L | #.2 | F37Z 13550 AA | $6.95 |
| | #Included in R&R Step Bumper Face Bar | | | | |
| | w/o Bumper (P) | | .2 | E1FZ 13550 A | $10.42 |
| | (P) Paint to Match | | | | |
| 2 | Socket w/Wire | | | F37Z 13412 A | $109.30 |
| 3 | Bulb | R | #.2 | C2AZ 13466 C | $0.80 |
| | | L | #.2 | C2AZ 13466 C | $0.80 |
| | #Included in R&R License Lamp | | | | |

## STOP/CARGO LAMP
### HIGH MOUNT

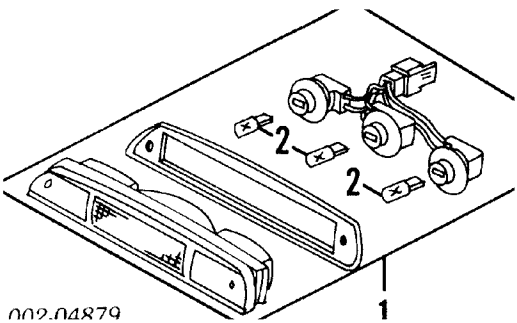


| | | | | | |
|---|---|---|---|---|---|
| | R&I High Mount Lamp | | .2 | | |
| 1 | Lamp Assy, Stop¶ | | | | |
| | w/Cargo Lamp | 93-9 | #.3 | F37Z 13A613 A | $54.05 |
| | | 95-9 | #.3 | YC3Z 13A613 BA | $66.60 |
| | w/o Cargo Lamp | | #.3 | YC3Z 13A613 CA | $69.85 |
| | ¶Located on Roof Panel | | | | |
| | #Included in R&R Roof Panel | | | | |
| 2 | Bulb (3) (a) | | #.2 | E35Y 13466 A | $2.10 |
| | (a) Included w/Stop Lamp Assy | | | | |
| | #R&R One or All | | | | |

# REAR BUMPER

## Procedures 27 and 28

## STEP BUMPER

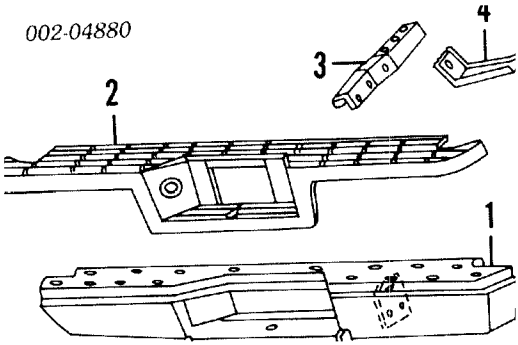


| | | |
|---|---|---|
| Refinish Face Bar | 1.6 | |
| R&I Bumper Assy | .4 | |
| O/H Bumper Assy (Includes R&I) | 1.1 | |

NOTE: All Parts in this section are included in overhaul unless noted otherwise.

| | | | | |
|---|---|---|---|---|
| 1 Face Bar Assy | | | | |
| 1993-94 | | | | |
| Styleside | | | | |
| Black | | 1.1 | 1L5Z 17906 EA | $221.67 |
| Black/Opal Pad¶ | | 1.1 | 1L5Z 17906 EA | $221.67 |
| Black/Titanium Pad¶ | | 1.1 | 1L5Z 17906 EA | $221.67 |
| Chrome | | 1.1 | YL5Z 17906 MA | $356.59 |
| Flareside (P) | | 1.1 | YL5Z 17906 KA | $422.08 |
| 1995-97 | | | | |
| Styleside | | | | |
| Chrome | | 1.1 | YL5Z 17906 MA | $356.59 |
| Graphite | | 1.1 | 1L5Z 17906 EA | $221.67 |
| Titanium | | 1.1 | 1L5Z 17906 EA | $221.67 |
| Flareside | | | | |
| Chrome | 97 | 1.1 | YL5Z 17906 HA | $377.00 |
| Paint to Match | | 1.1 | YL5Z 17906 KA | $422.08 |
| ¶Colored Step Pad Included | | | | |
| (P) Paint to Match | | | | |
| 2 Pad, Step | | | | |
| Styleside | | | | |
| Chrome Face Bar | | | | |
| Graphite | | .3 | 4L5Z 17B807 BAF | $112.85 |
| Titanium | | .3 | 4L5Z 17B807 BAD | $109.57 |
| Opal | | .3 | 4L5Z 17B807 BAE | $131.48 |
| Black Face Bar | | | | |
| Titanium¶ | | .3 | F37Z 17B807 D | $88.53 |

| | | | | | |
|---|---|---|---|---|---|
| Opal¶ | | | .3 | F37Z 17B807 E | $102.17 |
| Flareside | 93-9 | | .3 | 4L5Z 17B807 AAC | $109.48 |
| | 96-9 | | .3 | 4L5Z 17B807 AAD | $126.38 |

¶Included w/Face Bar Assy

| | | | | | |
|---|---|---|---|---|---|
| 3 Arm, Bumper | R | IOH | | F37Z 17787 A | $13.15 |
| | L | IOH | | F37Z 17788 A | $13.52 |
| 4 Reinf, Bumper Arm | | | | | |
| Chrome Face Bar | R | IOH | | F37Z 17795 A | $11.32 |
| | L | IOH | | F37Z 17796 A | $11.32 |
| Black Face Bar | R | IOH | | E3TZ 17795 A | $37.20 |
| | L | IOH | | E3TZ 17796 A | $41.12 |

## TUBULAR

| | | | | | |
|---|---|---|---|---|---|
| Refinish Face Bar | | | 1.0 | | |
| R&I Bumper | | | .4 | | |
| O/H Bumper Assy (Includes R&I) | | | .8 | | |

NOTE: All Parts in this section are included in overhaul unless noted otherwise.

| | | | | | |
|---|---|---|---|---|---|
| Face Bar | | | .8 | F37Z 17906 B | $566.13 |
| Cap, End (4) | R | | .2 | F37Z 17810 A | $22.27 |
| | L | | .2 | F37Z 17810 A | $22.27 |